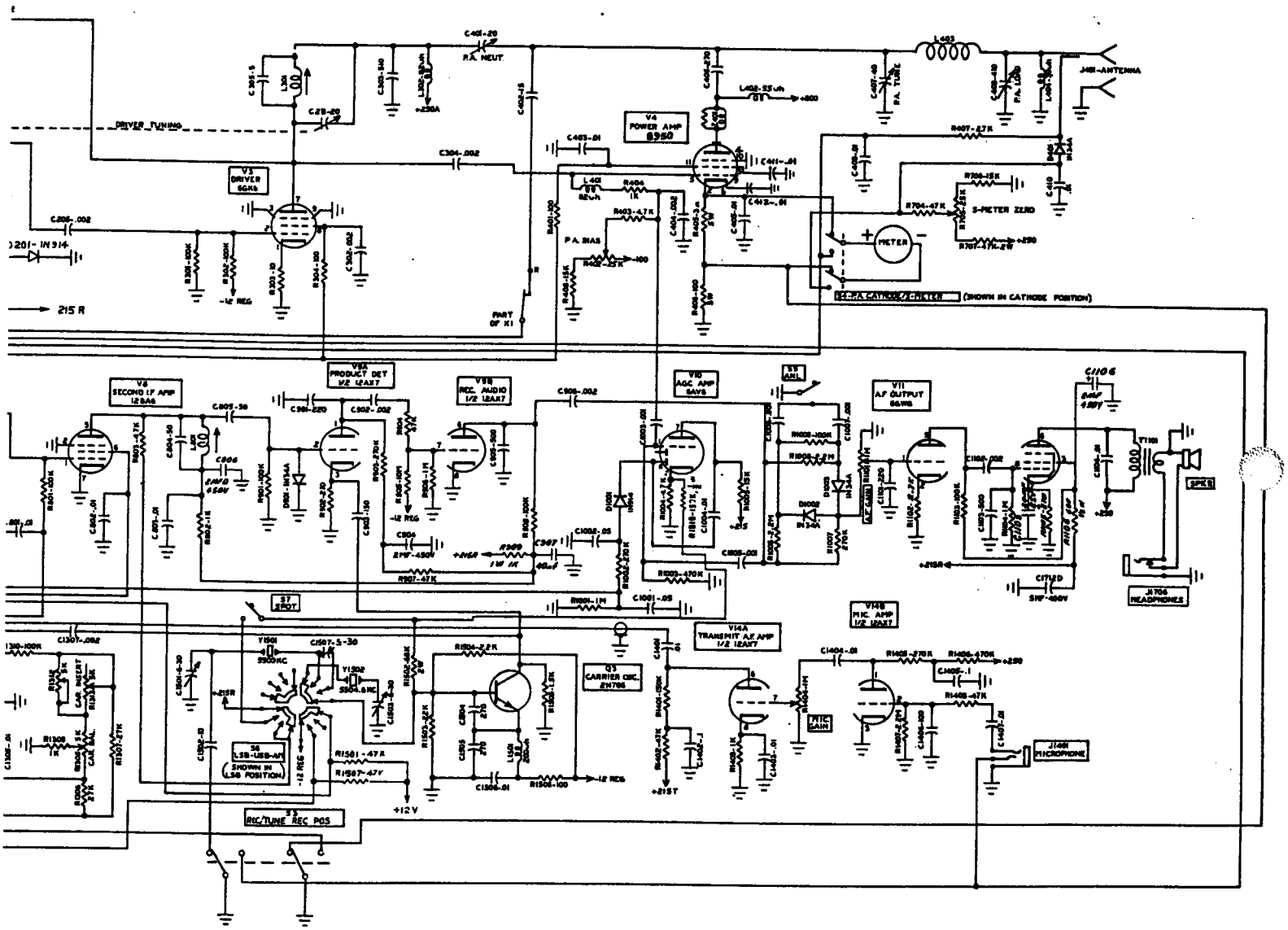

SCHEMATIC DIAGRAM - SILTRONIX MODEL 1011 D TRANSCEIVER