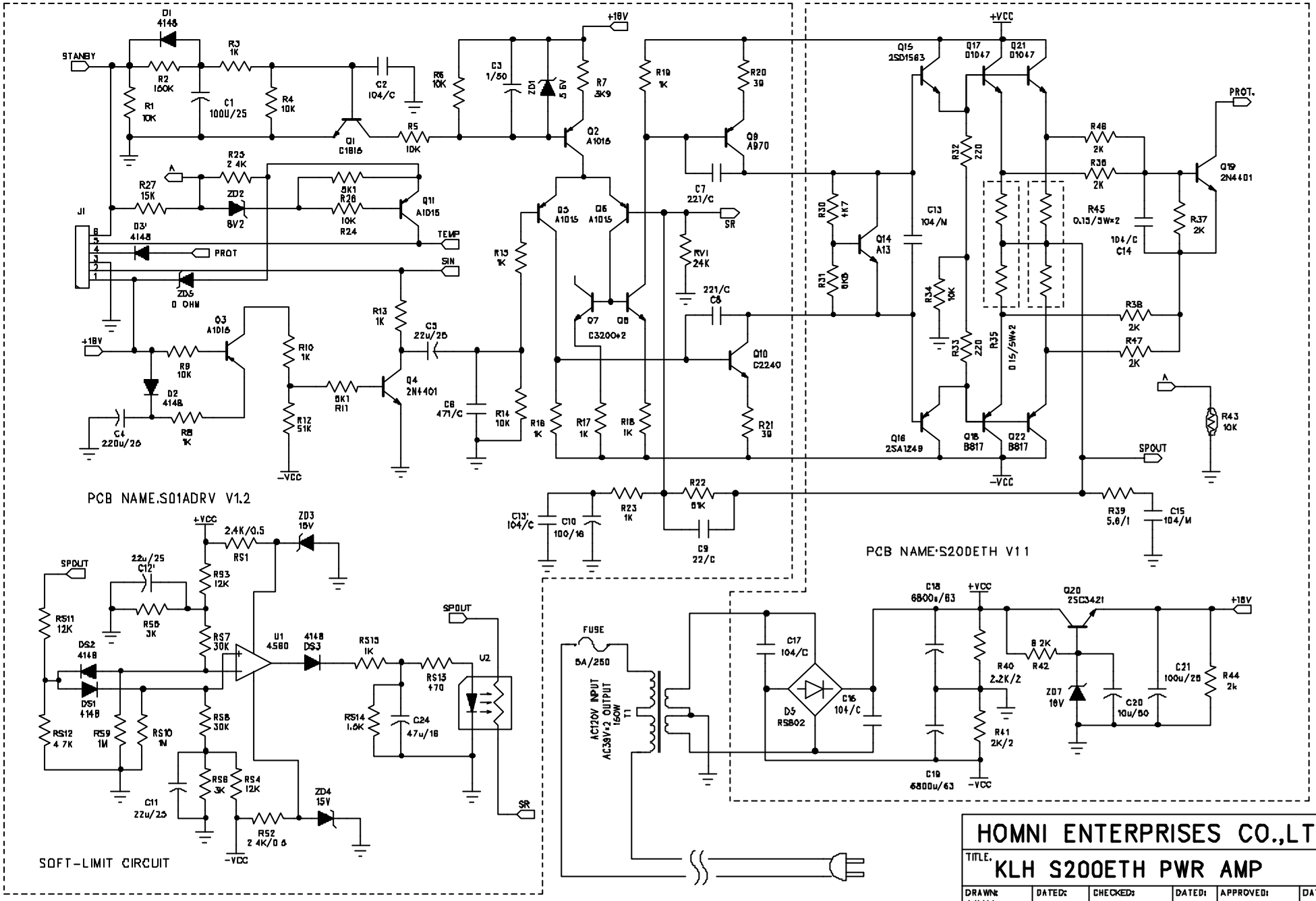
STANBY
D1 4148
R3 1K
R2 160K
R1 10K
C1 100U/25
R4 10K
C2 104/C
Q1 C1815
R5 10K
R6 10K
C3 1/50
ZD1 5.6V
+18V
R7 3K9
Q2 A1015
R19 1K
R20 39
Q9 A970
C7 221/C
SR
RV1 24K
221/C C6
Q10 C2240
R21 39
R22 81K
C9 22/C
R23 1K
C10 100/16
C13' 104/C
R25 2.4K
ZD2 8V2
R27 15K
R26 5K1
R24 10K
Q11 A1015
TEMP
SIN
PROT
J1
D3' 4148
ZD5 0 OHM
Q3 A1015
R9 10K
D2 4148
C4 220u/25
R8 1K
R10 1K
R11 5K1
R12 51K
R13 1K
C5 22u/25
Q4 2N4401
C8 471/C
R14 10K
R15 1K
R16 1K
Q5 A1015
Q6 A1015
Q7 C3200+2
Q8
R17 1K
R18 1K
-VCC
PCB NAME.S01ADRV V1.2
+VCC
Q15 2SD1583
Q17 D1047
Q21 D1047
R32 220
R30 4K7
R31 6K8
Q14 A13
C13 104/N
R34 10K
R33 220
R35 0.15/5W+2
R45 0.15/5W+2
R46 2K
R36 2K
R37 2K
C14 104/C
Q19 2N4401
PROT.
R38 2K
R47 2K
R43 10K
SPOUT
Q16 2SA1249
Q18 B817
Q22 B817
R39 5.6/1
C15 104/M
PCB NAME:S200ETH V1.1
SPOUT
22u/25 C12'
R55 3K
R53 12K
RS1 2.4K/0.5
ZD3 15V
RS11 12K
DS2 4148
DS1 4148
RS12 4.7K
RS9 1M
RS10 1M
RS7 30K
U1 4580
4148 DS3
RS15 1K
RS13 470
U2
RS14 1.5K
C24 47u/16
RS8 30K
RS6 3K
RS4 12K
C11 22u/25
ZD4 15V
R52 2.4K/0.5
SR
-VCC
SOFT-LIMIT CIRCUIT
FUSE 5A/250
AC120V INPUT
AC39V+2 OUTPUT
150W
T1
C17 104/C
D5 RS802
C16 104/C
C18 6800u/63
C19 6800u/63
R40 2.2K/2
R41 2K/2
R42 8.2K
Q20 2SC3421
ZD7 18V
C20 10u/50
C21 100u/25
R44 2k
+18V
HOMNI ENTERPRISES CO.,LTD
TITLE: KLH S200ETH PWR AMP
DRAWN: YYH
DATED: 2000 03 28
CHECKED:
DATED:
APPROVED:
DATED:
DWG NO: PT-X-XXXXX-XX
SCALE:NONE
SIZE:A3
REV:3.00
SHEET:XXX OF XXX
AMPSUN R&D CENTER