Pioneer

Service Manual

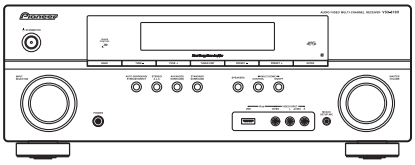

VSX-819H-K

ORDER NO.
RRV3894

AUDIO/VIDEO MULTI-CHANNEL RECEIVER

VSX-819H-K

THIS MANUAL IS APPLICABLE TO THE FOLLOWING MODEL(S) AND TYPE(S).

Model	Type	Power Requirement	Remarks
VSX-819H-K	KUCXCN	AC 120 V	

For details, refer to "Important Check Points for good servicing".

PIONEER CORPORATION 4-1, Meguro 1-chome, Meguro-ku, Tokyo 153-8654, Japan
PIONEER ELECTRONICS (USA) INC. P.O. Box 1760, Long Beach, CA 90801-1760, U.S.A.
PIONEER EUROPE NV Haven 1087, Keetberglaan 1, 9120 Melsele, Belgium
PIONEER ELECTRONICS ASIACENTRE PTE. LTD. 253 Alexandra Road, #04-01, Singapore 159936
ⓒ**PIONEER CORPORATION 2009**

T-ZZK MAR. 2009 Printed in Japan

SAFETY INFORMATION

This service manual is intended for qualified service technicians; it is not meant for the casual do-it-yourselfer. Qualified technicians have the necessary test equipment and tools, and have been trained to properly and safely repair complex products such as those covered by this manual.
Improperly performed repairs can adversely affect the safety and reliability of the product and may void the warranty. If you are not qualified to perform the repair of this product properly and safely, you should not risk trying to do so and refer the repair to a qualified service technician.

WARNING
This product may contain a chemical known to the State of California to cause cancer, or birth defects or other reproductive harm.

Health & Safety Code Section 25249.6 - Proposition 65

NOTICE
(FOR CANADIAN MODEL ONLY)
Fuse symbols (fast operating fuse) and/or (slow operating fuse) on PCB indicate that replacement parts must be of identical designation.

REMARQUE
(POUR MODÈLE CANADIEN SEULEMENT)
Les symboles de fusible (fusible de type rapide) et/ou (fusible de type lent) sur CCI indiquent que les pièces de remplacement doivent avoir la même désignation.

(FOR USA MODEL ONLY)

1. SAFETY PRECAUTIONS

The following check should be performed for the continued protection of the customer and service technician.

LEAKAGE CURRENT CHECK

Measure leakage current to a known earth ground (water pipe, conduit, etc.) by connecting a leakage current tester such as Simpson Model 229-2 or equivalent between the earth ground and all exposed metal parts of the appliance (input/output terminals, screwheads, metal overlays, control shaft, etc.). Plug the AC line cord of the appliance directly into a 120V AC 60 Hz outlet and turn the AC power switch on. Any current measured must not exceed 0.5 mA.

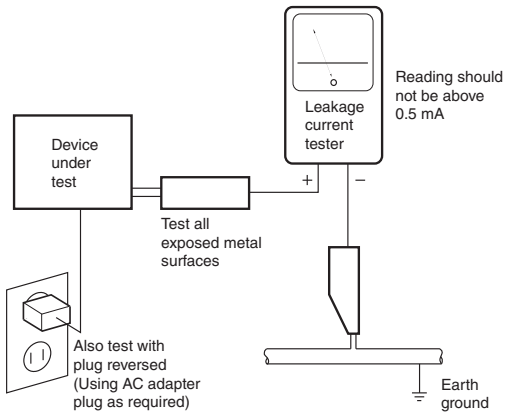

AC Leakage Test

ANY MEASUREMENTS NOT WITHIN THE LIMITS OUTLINED ABOVE ARE INDICATIVE OF A POTENTIAL SHOCK HAZARD AND MUST BE CORRECTED BEFORE RETURNING THE APPLIANCE TO THE CUSTOMER.

2. PRODUCT SAFETY NOTICE

Many electrical and mechanical parts in the appliance have special safety related characteristics. These are often not evident from visual inspection nor the protection afforded by them necessarily can be obtained by using replacement components rated for voltage, wattage, etc. Replacement parts which have these special safety characteristics are identified in this Service Manual.

Electrical components having such features are identified by marking with a ⚠ on the schematics and on the parts list in this Service Manual.
The use of a substitute replacement component which does not have the same safety characteristics as the PIONEER recommended replacement one, shown in the parts list in this Service Manual, may create shock, fire, or other hazards.

Product Safety is continuously under review and new instructions are issued from time to time. For the latest information, always consult the current PIONEER Service Manual. A subscription to, or additional copies of, PIONEER Service Manual may be obtained at a nominal charge from PIONEER.

[Important Check Points for Good Servicing]

In this manual, procedures that must be performed during repairs are marked with the below symbol.
Please be sure to confirm and follow these procedures.

1. Product safety

Please conform to product regulations (such as safety and radiation regulations), and maintain a safe servicing environment by following the safety instructions described in this manual.

① Use specified parts for repair.

Use genuine parts. Be sure to use important parts for safety.

② Do not perform modifications without proper instructions.

Please follow the specified safety methods when modification(addition/change of parts) is required due to interferences such as radio/TV interference and foreign noise.

③ Make sure the soldering of repaired locations is properly performed.

When you solder while repairing, please be sure that there are no cold solder and other debris.
Soldering should be finished with the proper quantity. (Refer to the example)

④ Make sure the screws are tightly fastened.

Please be sure that all screws are fastened, and that there are no loose screws.

⑤ Make sure each connectors are correctly inserted.

Please be sure that all connectors are inserted, and that there are no imperfect insertion.

⑥ Make sure the wiring cables are set to their original state.

Please replace the wiring and cables to the original state after repairs.
In addition, be sure that there are no pinched wires, etc.

⑦ Make sure screws and soldering scraps do not remain inside the product.

Please check that neither solder debris nor screws remain inside the product.

⑧ There should be no semi-broken wires, scratches, melting, etc. on the coating of the power cord.

Damaged power cords may lead to fire accidents, so please be sure that there are no damages.
If you find a damaged power cord, please exchange it with a suitable one.

⑨ There should be no spark traces or similar marks on the power plug.

When spark traces or similar marks are found on the power supply plug, please check the connection and advise on secure connections and suitable usage. Please exchange the power cord if necessary.

⑩ Safe environment should be secured during servicing.

When you perform repairs, please pay attention to static electricity, furniture, household articles, etc. in order to prevent injuries.
Please pay attention to your surroundings and repair safely.

2. Adjustments

To keep the original performance of the products, optimum adjustments and confirmation of characteristics within specification.
Adjustments should be performed in accordance with the procedures/instructions described in this manual.

3. Lubricants, Glues, and Replacement parts

Use grease and adhesives that are equal to the specified substance.
Make sure the proper amount is applied.

4. Cleaning

For parts that require cleaning, such as optical pickups, tape deck heads, lenses and mirrors used in projection monitors, proper cleaning should be performed to restore their performances.

5. Shipping mode and Shipping screws

To protect products from damages or failures during transit, the shipping mode should be set or the shipping screws should be installed before shipment. Please be sure to follow this method especially if it is specified in this manual.

CONTENTS

SAFETY INFORMATION 2
1. SERVICE PRECAUTIONS 5
1.1 NOTES ON SOLDERING 5
1.2 CAUTION 5
2. SPECIFICATIONS 6
2.1 SPECIFICATIONS 6
2.2 PANEL FACILITIES 7
3. BASIC ITEMS FOR SERVICE 11
3.1 CHECK POINTS AFTER SERVICING 11
3.2 PCB LOCATIONS 12
3.3 JIGS LIST 13
4. BLOCK DIAGRAM 14
4.1 OVERALL CONNECTION DIAGRAM 14
4.2 AUDIO BLOCK DIAGRAM 16
4.3 VIDEO BLOCK DIAGRAM 18
4.4 U-COM BLOCK DIAGRAM 19
4.5 POWER SUPPLY BLOCK DIAGRAM 20
5. DIAGNOSIS 21
5.1 DIAGNOSIS FLOWCHART 21
5.2 DETECTION CIRCUIT 34
6. SERVICE MODE 37
6.1 SERVICE MODE 37
7. DISASSEMBLY 40
7.1 DISASSEMBLY 40
8. EACH SETTING AND ADJUSTMENT 48
8.1 IDLE CURRENT ADJUSTMENT 48
9. EXPLODED VIEWS AND PARTS LIST 50
9.1 PACKING SECTION 50
9.2 EXTERIOR SECTION 52
10. SCHEMATIC DIAGRAM 56
10.1 P.C.B SUB ASSY (MAIN) and P.C.B SUB ASSY (P/T) 56
10.2 P.C.B SUB ASSYS (FRONT), (VOLUME), (FUNCTION), (HEADPHONE), (F-VIDEO) and (MIC) 58
10.3 P.C.B SUB ASSY (AMP) 60
10.4 P.C.B SUB ASSY (INPUT-819) 62
10.5 P.C.B SUB ASSY (VIDEO-819) 64
10.6 P.C.B SUB ASSY (SPEAKER-819) and P.C.B SUB ASSY (CNT) 66
10.7 P.C.B SUB ASSY (DSP) (1/2) 68
10.8 P.C.B SUB ASSY (DSP) (2/2) 70
10.9 P.C.B SUB ASSY (USB) 72
11. PCB CONNECTION DIAGRAM 74
11.1 P.C.B SUB ASSY (MAIN) and P.C.B SUB ASSY (P/T) 74
11.2 P.C.B SUB ASSYS (FRONT) 78
11.3 P.C.B SUB ASSYS (VOLUME), (FUNCTION), (HEADPHONE), (F-VIDEO) and (MIC) 80
11.4 P.C.B SUB ASSY (AMP) 82
11.5 P.C.B SUB ASSY (INPUT-819) 84
11.6 P.C.B SUB ASSY (VIDEO-819) 86
11.7 P.C.B SUB ASSY (SPEAKER-819) 90
11.8 P.C.B SUB ASSY (DSP) and P.C.B SUB ASSY (CNT) 92
11.9 P.C.B SUB ASSY (HDMI-819) 96
11.10 P.C.B SUB ASSY (USB) 98
12. PCB PARTS LIST 99

1. SERVICE PRECAUTIONS

1.1 NOTES ON SOLDERING

- For environmental protection, lead-free solder is used on the printed circuit boards mounted in this unit.
  Be sure to use lead-free solder and a soldering iron that can meet specifications for use with lead-free solders for repairs accompanied by reworking of soldering.

- Compared with conventional eutectic solders, lead-free solders have higher melting points, by approximately 40 ºC.
  Therefore, for lead-free soldering, the tip temperature of a soldering iron must be set to around 373 ºC in general, although the temperature depends on the heat capacity of the PC board on which reworking is required and the weight of the tip of the soldering iron.

Do NOT use a soldering iron whose tip temperature cannot be controlled.

Compared with eutectic solders, lead-free solders have higher bond strengths but slower wetting times and higher melting temperatures (hard to melt/easy to harden).

The following lead-free solders are available as service parts:
- Parts numbers of lead-free solder:
  GYP1006 1.0 in dia.
  GYP1007 0.6 in dia.
  GYP1008 0.3 in dia.

1.2 CAUTION

- **Discharging**
  For more detail, please refer to “7. DISASSEMBLY - 1. Discharging”.

- **Notes on Ground Points Connection**
  For more detail, please refer to “7. DISASSEMBLY - 2. Notes on Ground Points Connection”.

2. SPECIFICATIONS
2.1 SPECIFICATIONS

Amplifier section

Continuous average power output of 80 watts* per channel, min., at 8 ohms, from 20 Hz to 20 000 Hz with no more than 0.2 % total harmonic distortion.**

Front (stereo) . . . . . .80 W + 80 W
Power output (1 kHz, 8 Ω, 0.05 %). . . . 110 W per channel
Guaranteed speaker impedance
FRONT:A, B . . . . . 6 Ω to 16 Ω
FRONT:A+B . . . . . 12 Ω to 16 Ω
SURROUND, CENTER. . . . . 6 Ω to 16 Ω
* Measured pursuant to the Federal Trade Commission's Trade Regulation rule on Power Output Claims for Amplifiers
** Measured by Audio Spectrum Analyzer

Audio Section

Input (Sensitivity/Impedance)
LINE . . . . . .200 mV/47 kΩ
Output (Level/Impedance)
REC. . . . . .200 mV/330 Ω
ZONE 2 . . . . . .200 mV/1 kΩ
Signal-to-Noise Ratio (IHF, short circuited, A network)
LINE . . . . . .98 dB
Signal-to-Noise Ratio [EIA, at 1 W (1 kHz)]
LINE . . . . . .79 dB

Tuner Section

Frequency Range (FM) . . . . . .87.5 MHz to 108 MHz
Antenna Input (FM) . . . . . 75 Ω unbalanced
Frequency Range (AM) . . . . . 530 kHz to 1700 kHz
Antenna (AM) . . . . . Loop antenna

Video Section

Signal level
Composite. . . . . 1 Vp-p (75 Ω)
Component Video . . . . . .Y: 1.0 Vp-p (75 Ω)
PB, PR: 0.7 Vp-p (75 Ω)
Corresponding maximum resolution
Component Video 1080p (1125p)

Digital In/Out Section

HDMI terminal . . . . . .19-pin (Not DVI)
HDMI output type . . . . . 5 V, 100 mA
USB terminal . . . . . USB2.0 Full Speed (Type A)
iPod terminal . . . . . .USB, and Video (Composite)
SIRIUS antenna cable . . . . . .8-pin mini DIN cable

Integrated control section

Control (IR) terminal. . . . . .ϕ 3.5 Mini-jack (MONO)
IR signal . . . . . .High Active (High Level : 2.0 V)

Miscellaneous

Power Requirements . . . . . .AC 120 V, 60 Hz
Power Consumption. . . . . .250 W
In standby . . . . . .0.5 W
Dimensions
. . . . . .420 mm (W) x 158 mm (H) x 347.7 mm (D)
$16^{9}/_{16}$ in. (W) x $6^{1}/_{4}$ in. (H) x $13^{3}/_{4}$ in. (D)
Weight (without package). . . . . 9 kg (19 lb 14 oz)

Furnished Parts

Microphone (for Auto MCACC setup) 1
Remote control. 1
Dry cell batteries (AAA size IEC R03) 2
AM loop antenna 1
FM wire antenna. 1
iPod cable 1
Operating instructions

Note

- Specifications and the design are subject to possible modifications without notice, due to improvements.

Manufactured under license from Dolby Laboratories. Dolby, Pro Logic, Surround EX and the double-D symbol are trademarks of Dolby Laboratories.

Manufactured under license under U.S. Patent #'s: 5,451,942; 5,956,674; 5,974,380; 5,978,762; 6,226,616; 6,487,535 & other U.S. and worldwide patents issued & pending. DTS is a registered trademark and the DTS logos, Symbol, DTS-HD, DTS-HD High Resolution Audio and DTS-HD High Res Audio are trademarks of DTS, Inc. © 1996-2007 DTS, Inc. All Rights Reserved.

Accessories

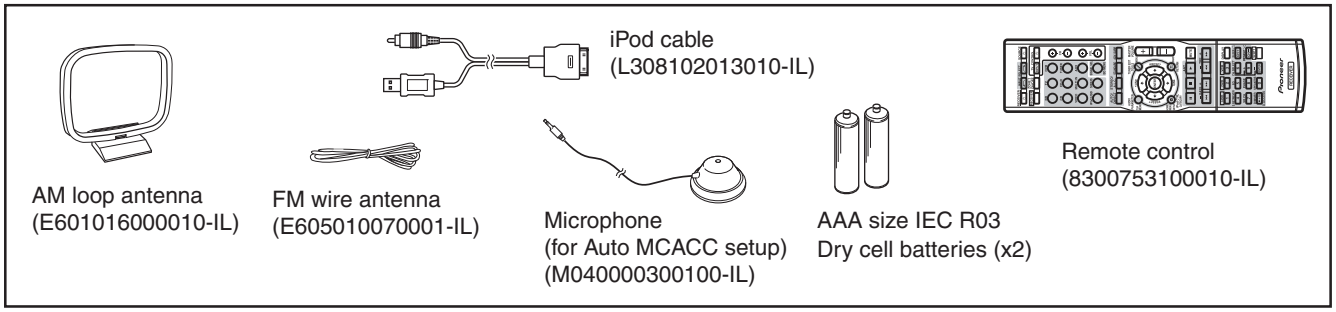

2.2 PANEL FACILITIES

Front panel

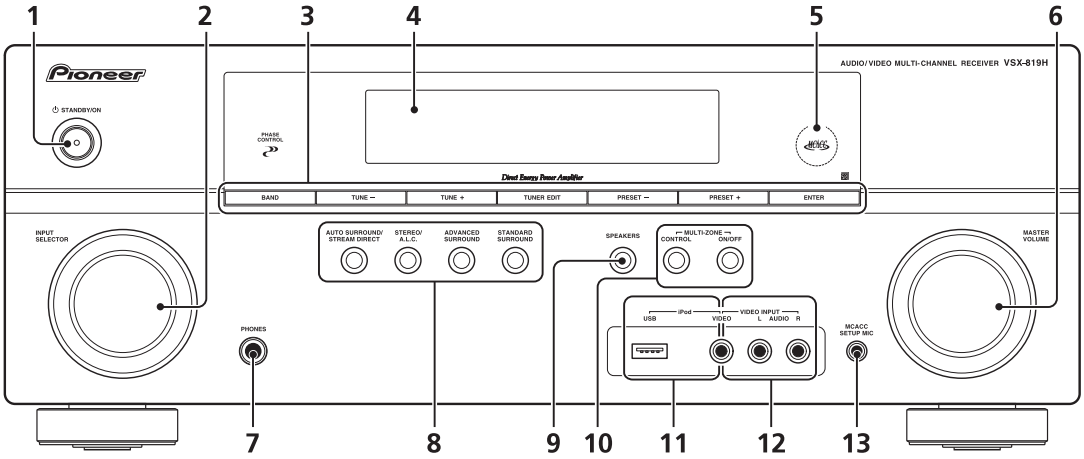

1 ⏻ STANDBY/ON

2 INPUT SELECTOR dial
Selects an input source.

3 Tuner control buttons

BAND
Switches between AM, FM ST (stereo) and FM MONO radio bands.

TUNE +/–
Used to find radio frequencies and SIRIUS Radio channels.

TUNER EDIT
Use with **TUNE +/–**, **PRESET +/–** and **ENTER** to memorize and name stations for recall. Used to preset the channel in SIRIUS Radio.

PRESET +/–
Use to select preset radio stations and to select SIRIUS Radio channels.

4 Character display

5 MCACC indicator
Lights when Acoustic Calibration EQ is on (Acoustic Calibration EQ is automatically set to on after the Auto MCACC Setup).

6 MASTER VOLUME dial

7 PHONES jack
Use to connect headphones.

8 Listening mode buttons

AUTO SURROUND/STREAM DIRECT
Switches between Auto surround mode and Stream Direct playback. Stream Direct playback bypasses the tone controls for the most accurate reproduction of a source.

STEREO/A.L.C.
Switches between stereo playback, Auto level control stereo mode and Front Stage Surround Advance modes.

ADVANCED SURROUND
Switches between the various surround modes.

STANDARD SURROUND
Press for Standard decoding and to switch between the various DD Pro Logic II, DD Pro Logic IIx and NEO:6 options.

9 SPEAKERS
Use to change the speaker system.

10 MULTI ZONE controls
If you've made MULTI-ZONE connections use these controls to control the sub zone from the main zone.

11 iPod/USB terminal
Use to connect your Apple iPod or USB mass storage device as an audio source.

12 AUDIO/VIDEO input

13 MCACC SETUP MIC jack
Use to connect a microphone when performing Auto MCACC setup.

Rear panel

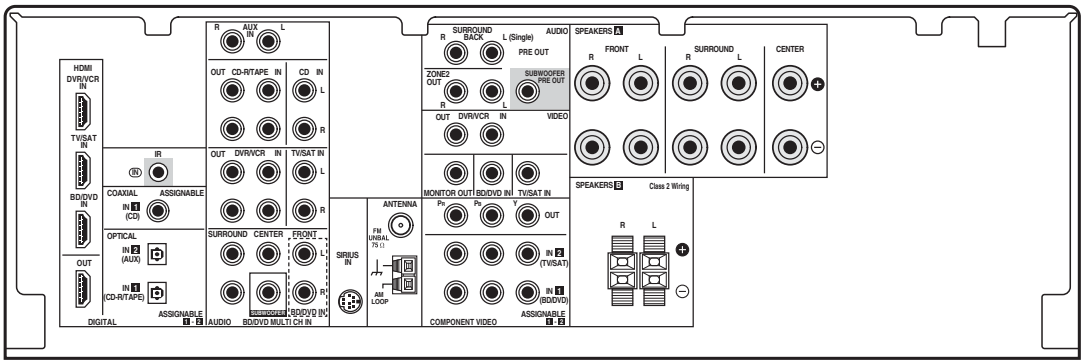

Display

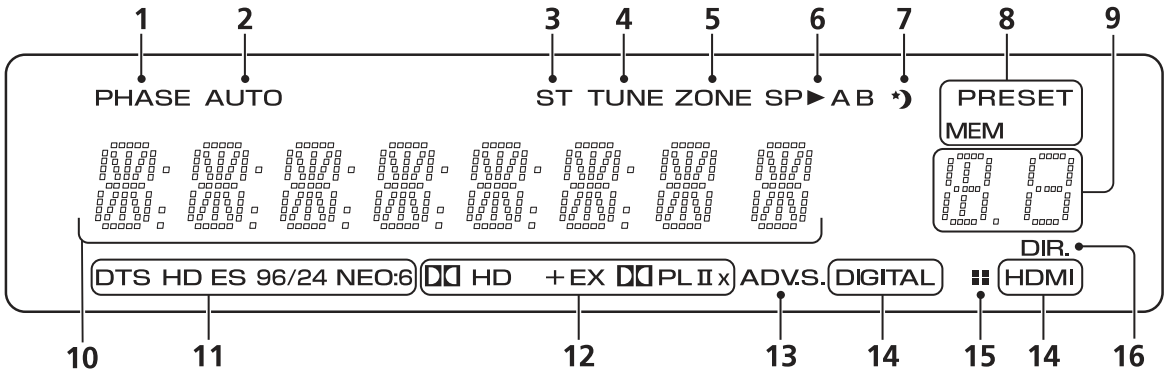

1 PHASE
Lights when the Phase Control is switched on.

2 AUTO
Lights when the Auto Surround feature is switched on.

3 ST
Lights when a stereo FM broadcast is being received in auto stereo mode.

4 TUNE
Lights when a normal broadcast channel or SIRIUS channel is being received.

5 ZONE
Lights when the MULTI-ZONE feature is active.

6 Speaker indicators
Lights to indicate the current speaker system, **A** and/or **B**.

7 Sleep timer indicator
Lights when the receiver is in sleep mode.

8 Tuner/SIRIUS preset indicators

PRESET
Shows when a preset radio station is registered or called.

MEM
Blinks when a radio station is registered.

9 PRESET Information or Input signal indicator
Shows the preset number of the tuner or the input signal type, etc.

10 Character display
Displays various system infomation.

11 DTS indicators

DTS
Lights when a source with DTS encoded audio signals is detected.

HD
Lights when a source with DTS-EXPRESS or DTS-HD encoded audio signals is detected.

ES
Lights when a source with DTS-ES encoded audio signals is detected.

96/24
Lights when a source with DTS 96/24 encoded audio signals is detected.

NEO:6
When one of the NEO:6 modes of the receiver is on, this lights to indicate NEO:6 processing.

12 Dolby Digital indicators

DD
Lights when a Dolby Digital encoded signal is detected.

HD+
Lights when a source with Dolby Digital Plus encoded audio signals is detected.

HD
Lights when a source with Dolby TrueHD encoded audio signals is detected.

EX
Lights when a source with Dolby Digital EX encoded audio signals is detected.

DD PLIIx
Lights to indicate DD Pro Logic II / DD Pro Logic IIx decoding.

13 ADV.S.
Lights when one of the Advanced Surround modes has been selected.

14 SIGNAL SELECT indicators

DIGITAL
Lights when a digital audio signal is selected.
Blinks when a digital audio signal is not selected.

HDMI
Lights when an HDMI signal is selected.
Blinks when an HDMI signal is not selected.

15 UP MIX indicator
Lights when the UP MIX Setting is set to **ON**. Also, lights when DIMMER is set to off.

16 DIR.
Lights when the **DIRECT** or **PURE DIRECT** mode is switched on.

Remote control

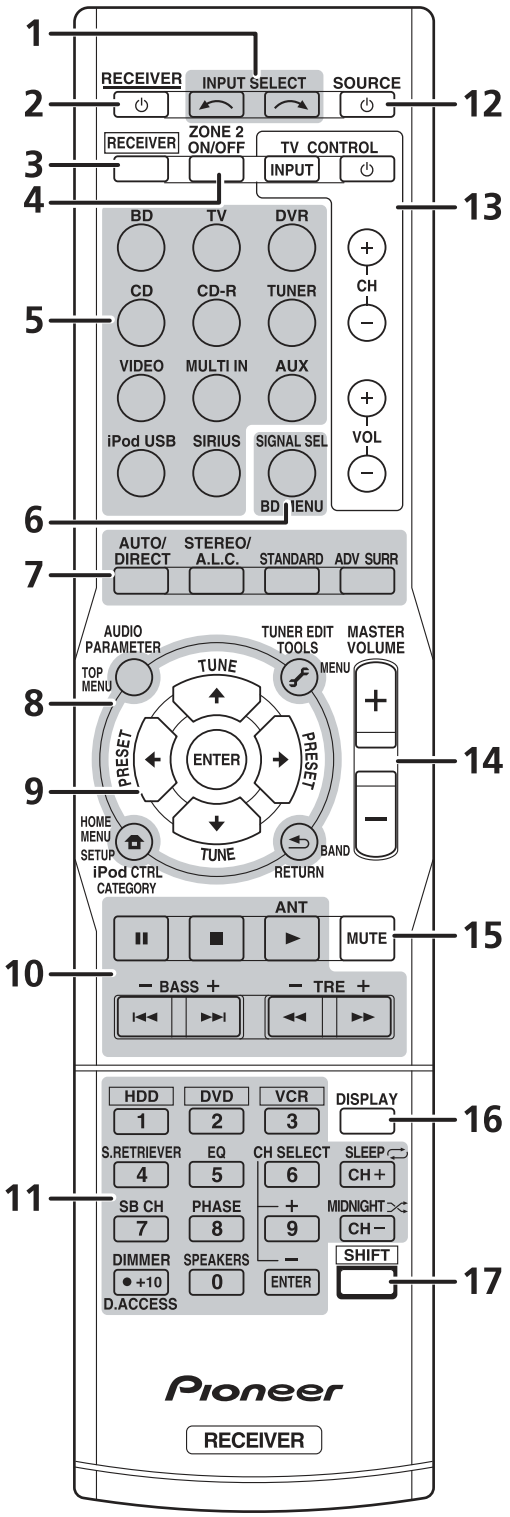

1 INPUT SELECT
Use to select the input source.

2 ⏻ RECEIVER
Switches the receiver between standby and on.

3 RECEIVER
Switches the remote to control the receiver (used to select the white commands above the number buttons (**S.RETRIEVER**, etc)). Also use this button to set up surround sound or Audio parameters.

4 ZONE 2 ON/OFF
Switches zone 2 of the multi-zone function between on and off.

5 MULTI CONTROL buttons
Press to select control of other components.

6 SIGNAL SEL
Use to select an input signal.

Press **BD** first to access:

BD MENU
Displays the disc menu of Blu-ray Discs.

7 Listening mode buttons

AUTO/DIRECT
Switches between Auto surround mode and Stream Direct playback. Stream Direct playback bypasses the tone controls for the most accurate reproduction of a source.

STEREO/A.L.C.
Switches between stereo playback, Auto level control stereo mode and Front Stage Surround Advance modes.

STANDARD
Press for Standard decoding and to switch between DD Pro Logic II options.

ADV SURR
Switches between the various surround modes.

8 System Setup and Component control buttons
The following button controls can be accessed after you have selected the corresponding **MULTI CONTROL** button (**BD**, **TV**, etc.).

Press **RECEIVER** first to access:

AUDIO PARAMETER
Use to access the Audio options.

SETUP
Press to access the System Setup menu.

RETURN
Confirm and exit the current menu screen.

Press **BD** or **DVR** first to access:

TOP MENU
Displays the disc 'top' menu of a BD/DVD.

HOME MENU
Displays the HOME MENU screen.

RETURN
Confirm and exit the current menu screen.

MENU
Displays the TOOLS menu screen of Blu-ray Disc player.

Press **TUNER** or **SIRIUS** first to access:

T.EDIT
Memorizes stations for recall. When TUNER is pressed,

also used to change the name.

BAND
Switches between AM, FM ST (stereo) and FM MONO radio bands.

CATEGORY
Press to browse SIRIUS radio broadcasts.

Press **iPod USB** first to access:

iPod CTRL
Switches between the iPod controls and the receiver controls.

9 ⬆⬇⬅➡ (TUNE ⬆/⬇, PRESET ⬅/➡), ENTER
Use the arrow buttons when setting up your surround sound system. Also used to control BD/DVD menus/options.

Use the **TUNE ⬆/⬇** buttons can be used to find radio frequencies and the **PRESET ⬅/➡** buttons can be used to select preset radio stations.

10 Component control buttons
The main buttons (▶, ■, etc.) are used to control a component after you have selected it using the input source buttons.

The controls above these buttons can be accessed after you have selected the corresponding input source button (for example **BD**, **DVR** or **TV**). These buttons also function as described below.

Press **RECEIVER** first to access:

BASS –/+
Use to adjust Bass[1]

TRE –/+
Use to adjust Treble[1]

Press **TV** first to access:

ANT
Use to select the VHF/UHF antennas or Cable TV.

11 Number buttons and other component controls
Use the number buttons to directly select a radio frequency or the tracks on a CD, DVD, etc. There are other buttons that can be accessed after the **RECEIVER** button is pressed. (For example **MIDNIGHT**, etc.)

HDD*, DVD*, VCR*
These buttons switch between the hard disk, DVD and VCR controls for HDD/DVD/VCR recorders.

S.RETRIEVER
Press to restore CD quality sound to compressed audio sources.

EQ
Press to switch on/off Acoustic Calibration EQ setting.

CH SELECT
Press repeatedly to select a channel, then use **+/–** to adjust the level.

CH SELECT +/–
Use to adjust the channel level.

SB CH
Press to select **ON**, **AUTO**, **OFF** the surround back channel.

PHASE
Press to switch on/off Phase Control.

DIMMER
Dims or brightens the display. The brightness can be controlled in four steps.

SPEAKERS
Use to change the speaker system.

MIDNIGHT
Switches to Midnight or Loudness listening.

SLEEP
Press to change the amount of time before the receiver switches into standby (**30 min – 60 min – 90 min – Off**). You can check the remaining sleep time at any time by pressing **SLEEP** once.

Press **SIRIUS** first to access:

D.ACCESS
After pressing, you can access a radio station directly using the number buttons.

12 ⏻ SOURCE
Press to turn on/off other components connected to the receiver.

13 TV CONTROL buttons
These buttons are dedicated to control the TV assigned to the **TV** button. Thus if you only have one TV to hook up to this system assign it to the **TV** button.

⏻
Use to turn on/off the power of the TV.

INPUT
Use to select the TV input signal.

CH +/–
Use to select channels.

VOL +/–
Use to adjust the volume on your TV.

14 MASTER VOLUME +/–
Use to set the listening volume.

15 MUTE
Mutes/unmutes the sound.

16 DISPLAY
Switches the display of this unit. The input name, listening mode or sound volume can be checked by selecting an input source.

17 SHIFT
Press to access the 'boxed' commands (above the buttons) on the remote. These buttons are marked with an asterisk (*) in this section. This button is also used for operating ZONE 2.

Note

1 The tone controls are disabled when the listening mode is set to **DIRECT** or **PURE DIRECT**.

3. BASIC ITEMS FOR SERVICE
3.1 CHECK POINTS AFTER SERVICING

Items to be checked after servicing / VSX, SC

To keep the product quality after servicing, confirm recommended check points shown below.

No.	Procedures	Check points
1	Confirm whether the customer complain has been solved. If the customer complain occurs with the particular source, such as Dolby Digital, DTS, AAC, DVD-A and HDMI, input it for the operation check.	The customer complain must not be reappeared. Video, Audio and operations must be normal.
2	Check the analog audio playback. (Make the analog connections with a DVD player.)	Each channel audio and operations must be normal.
3	Check the digital audio playback. (Make the digital connections with a DVD player.)	Each channel audio and operations must be normal.
4	Check surround playback. (Select Surround mode and check the multichannel operations via the DSP circuit.)	Each channel audio and operations must be normal.
5	Check the video outputs. (Connect with a DVD player.)	Video and operations must be normal.
6	Check the tuner (AM and FM) operations.	Audio and operations must be normal.
7	Check the sound from headphone output.	Sound must be normal, without noise.
8	Check the appearance of the product.	No scratches or dirt on its appearance after receiving it for service.

See the table below for the items to be checked regarding video and audio.

Item to be checked regarding video	Item to be checked regarding audio
Block noise	Distortion
Horizontal noise	Noise
Flicker	Volume too low
Disturbed image (video jumpiness)	Volume too high
Too dark	Volume fluctuating
Too bright	Sound interrupted
Mottled color	

3.2 PCB LOCATIONS

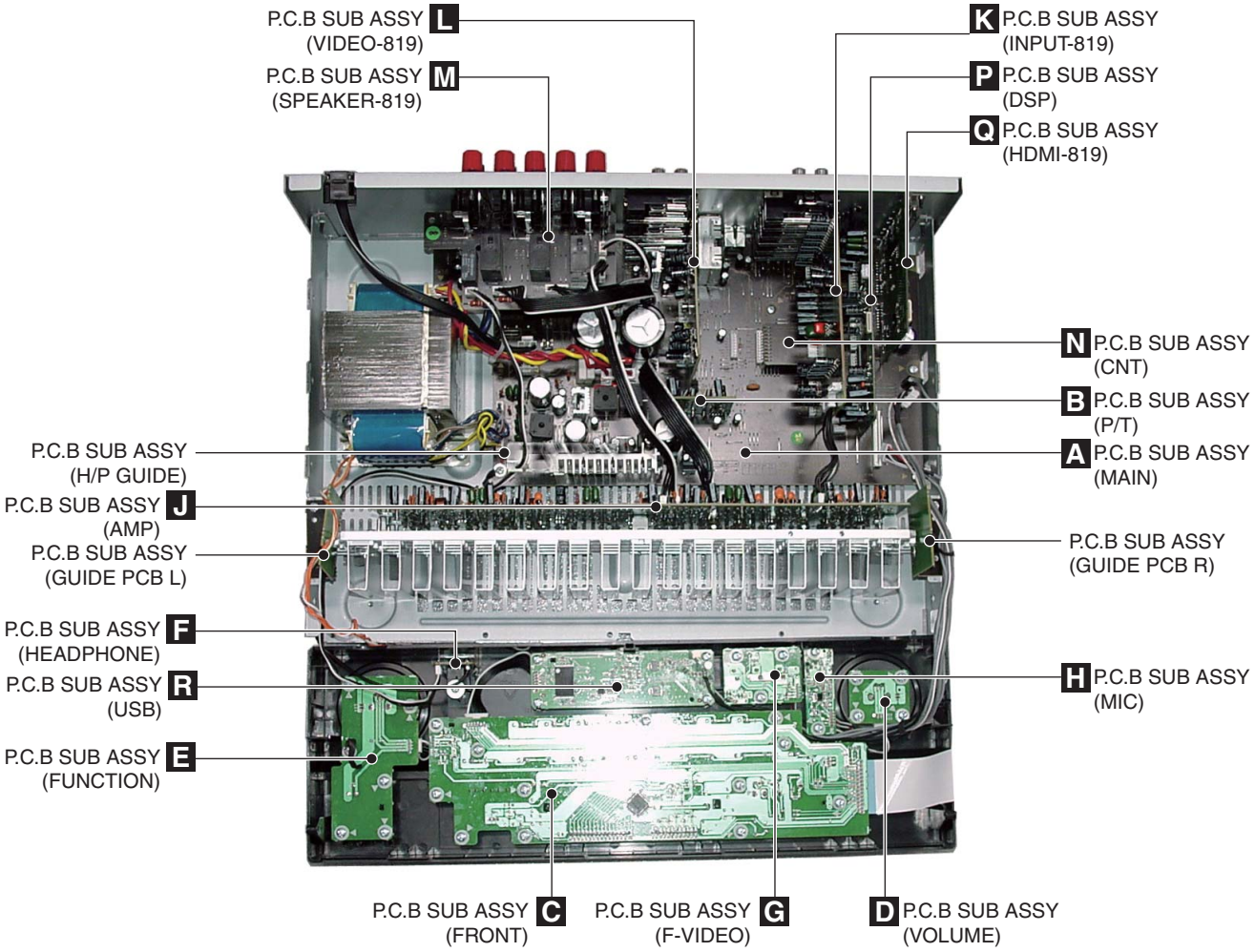

NOTES: ● *Parts marked by "NSP" are generally unavailable because they are not in our Master Spare Parts List.*
● *The ⚠ mark found on some component parts indicates the importance of the safety factor of the part. Therefore, when replacing, be sure to use parts of identical designation.*

LIST OF ASSEMBLIES

Mark	No.	Description	Part No.
NSP	1..	P.C.B TOTAL ASSY (FRONT)	7025HK0811011-IL
	2..	P.C.B SUB ASSY (FRONT)	7028067511010-IL
	2..	P.C.B SUB ASSY (HEADPHONE)	7028067512010-IL
	2..	P.C.B SUB ASSY (VOLUME)	7028067513010-IL
	2..	P.C.B SUB ASSY (FUNCTION)	7028067514010-IL
	2..	P.C.B SUB ASSY (F-VIDEO)	7028067515010-IL
	2..	P.C.B SUB ASSY (MIC)	7028067516010-IL
NSP	1..	P.C.B TOTAL ASSY (AMP)	7025HK0811012-IL
	2..	P.C.B SUB ASSY (AMP)	7028067521010-IL
NSP	1..	P.C.B TOTAL ASSY (DSP)	7025HK0811015-IL
	2..	P.C.B SUB ASSY (DSP)	7028067561010-IL
NSP	1..	P.C.B TOTAL ASSY (HDMI-819)	7025HK0811016-IL
	2..	P.C.B SUB ASSY (HDMI-819)	7028067571010-IL
NSP	1..	P.C.B TOTAL ASSY (USB)	7025HK0811017-IL
	2..	P.C.B SUB ASSY (USB)	7028067591010-IL

Mark	No.	Description	Part No.
NSP	1..	P.C.B TOTAL ASSY (MAIN)	7025HK0811030-IL
	2..	P.C.B SUB ASSY (MAIN)	7028067501030-IL
	2..	P.C.B SUB ASSY (GUIDE PCB L)	7028067502010-IL
	2..	P.C.B SUB ASSY (GUIDE PCB R)	7028067503010-IL
	2..	P.C.B SUB ASSY (CNT)	7028067504010-IL
	2..	P.C.B SUB ASSY (P/T)	7028067505010-IL
	2..	P.C.B SUB ASSY (H/P GUIDE)	7028067506010-IL
NSP	1..	P.C.B TOTAL ASSY (VIDEO-819)	7025HK0811031-IL
	2..	P.C.B SUB ASSY (VIDEO-819)	7028067541020-IL
NSP	1..	P.C.B TOTAL ASSY (INPUT-819)	7025HK0811032-IL
	2..	P.C.B SUB ASSY (INPUT-819)	7028067531030-IL
NSP	1..	P.C.B TOTAL ASSY (SPEAKER-819)	7025HK0811033-IL
	2..	P.C.B SUB ASSY (SPEAKER-819)	7028067601020-IL

3.3 JIGS LIST

■ Jigs list

Name	Jig No.	Remarks
10P extension jig cable	GGD1628	Diagnosis
8P extension jig cable	GGD1629	Diagnosis
Board to board extension jig cable	GGD1630	Diagnosis

■ Lubricants and Glues list

Name	Lubricants and Glues No.	Remarks
Silicon grease	GEM1057	Refer to "9.2 EXTERIOR SECTION"
Silicon adhesive	GYA1011 (KE40RTV-W)	Refer to "9.2 EXTERIOR SECTION"

4. BLOCK DIAGRAM
4.1 OVERALL CONNECTION DIAGRAM

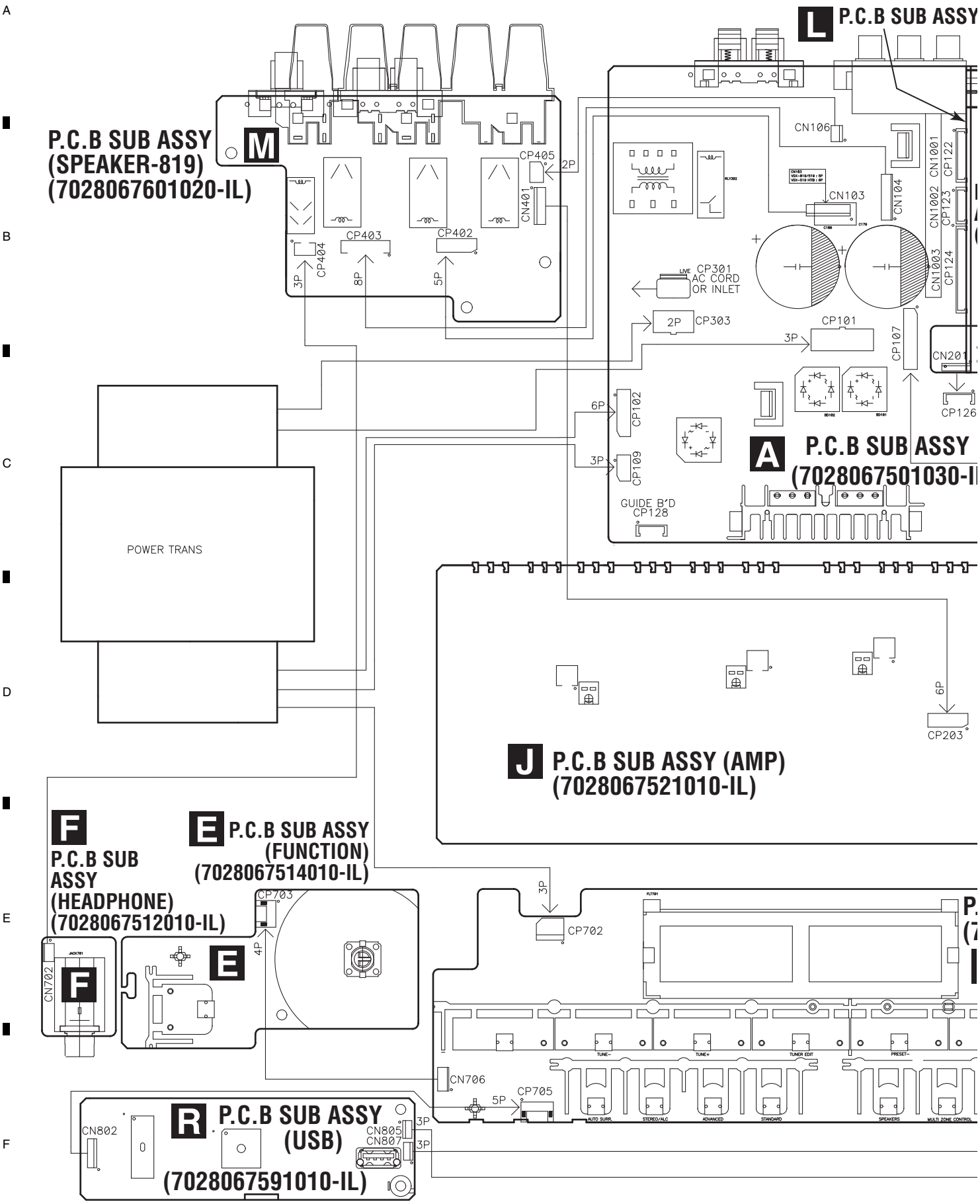

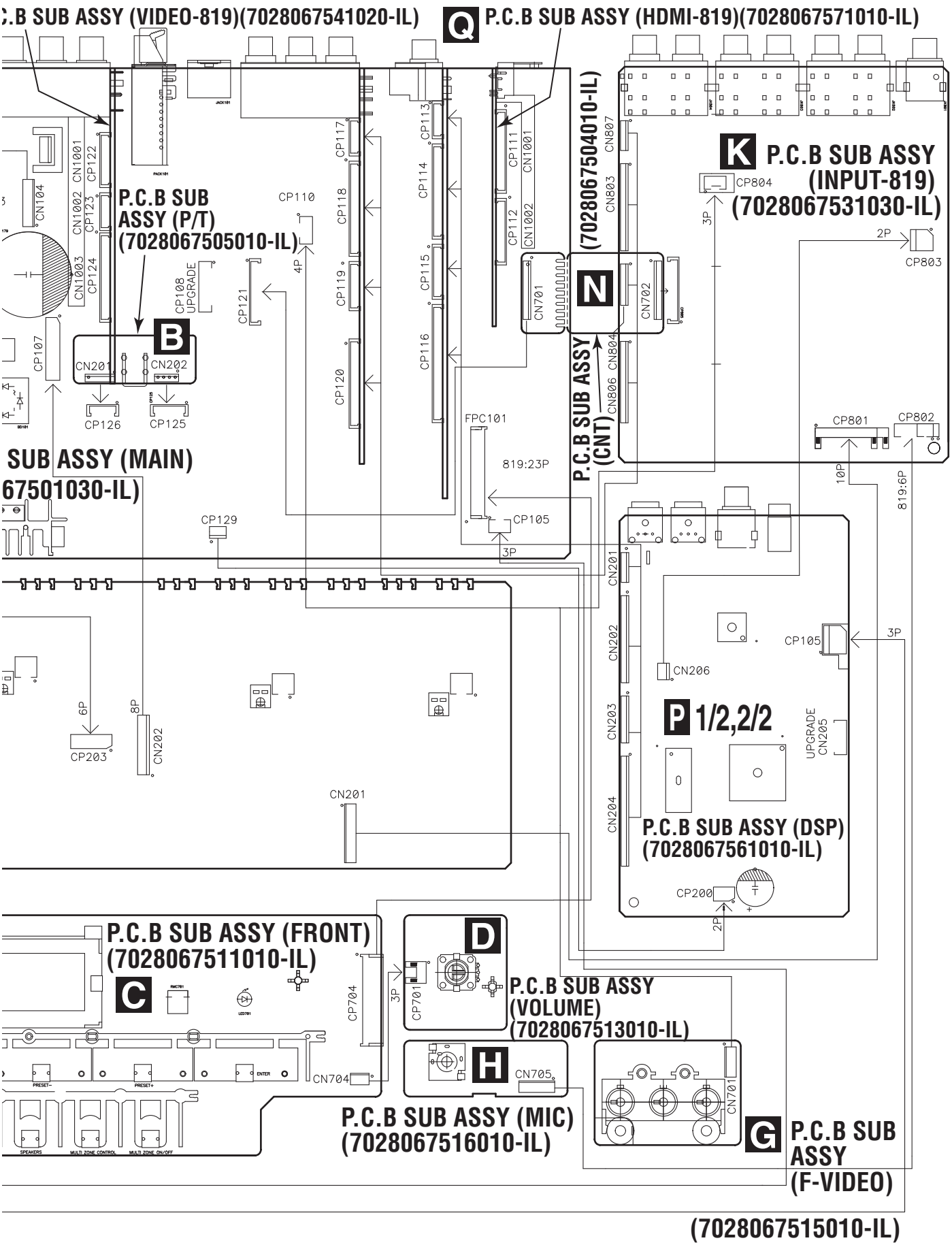
C.B SUB ASSY (VIDEO-819)(7028067541020-IL)
Q
P.C.B SUB ASSY (HDMI-819)(7028067571010-IL)
P.C.B SUB ASSY (P/T) (7028067505010-IL)
B
SUB ASSY (MAIN)
67501030-IL)
P.C.B SUB ASSY (7028067504010-IL)
(CNT)
N
K
P.C.B SUB ASSY (INPUT-819) (7028067531030-IL)
P 1/2,2/2
P.C.B SUB ASSY (DSP) (7028067561010-IL)
P.C.B SUB ASSY (FRONT) (7028067511010-IL)
C
D
P.C.B SUB ASSY (VOLUME) (7028067513010-IL)
H
P.C.B SUB ASSY (MIC) (7028067516010-IL)
G
P.C.B SUB ASSY (F-VIDEO)
(7028067515010-IL)
CN1001
CN1002
CN1003
CP122
CP123
CP124
CN104
CP107
CP108 UPGRADE
CP110
CP117
CP118
CP119
CP120
CP113
CP114
CP115
CP116
CP111
CP112
CN807
CN803
CN804
CN806
CN701
CN702
CP804
CP803
CP801
CP802
CN201
CN202
CP126
CP125
CP121
FPC101
819:23P
CP105
CP129
CN203
CN204
CN206
UPGRADE CN205
CP200
CP203
CN704
CP704
CP701
CN705
PRESET-
PRESET+
ENTER
SPEAKERS
MULTI ZONE CONTROL
MULTI ZONE ON/OFF
2P
3P
4P
6P
8P
10P
819:6P

4.2 AUDIO BLOCK DIAGRAM

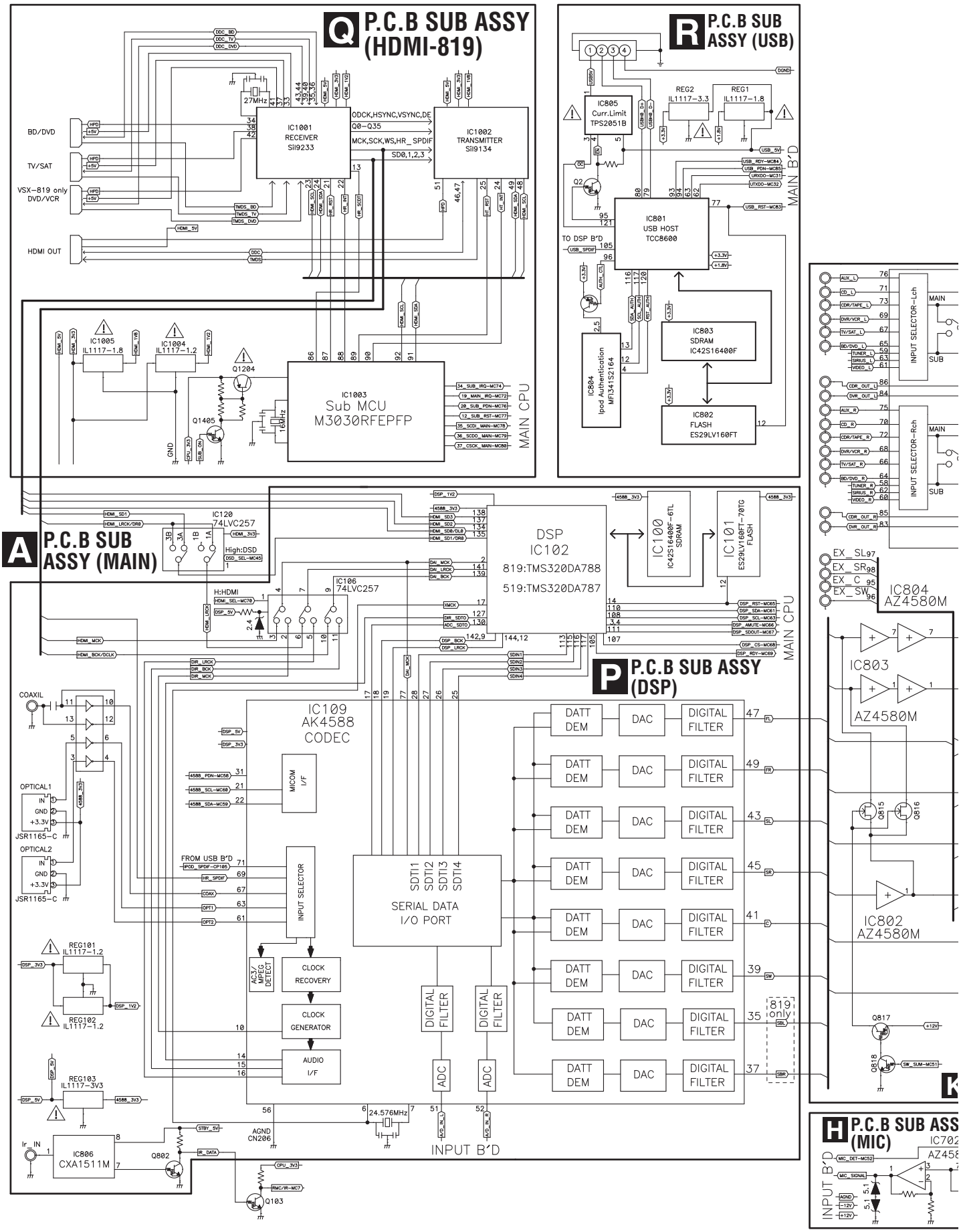

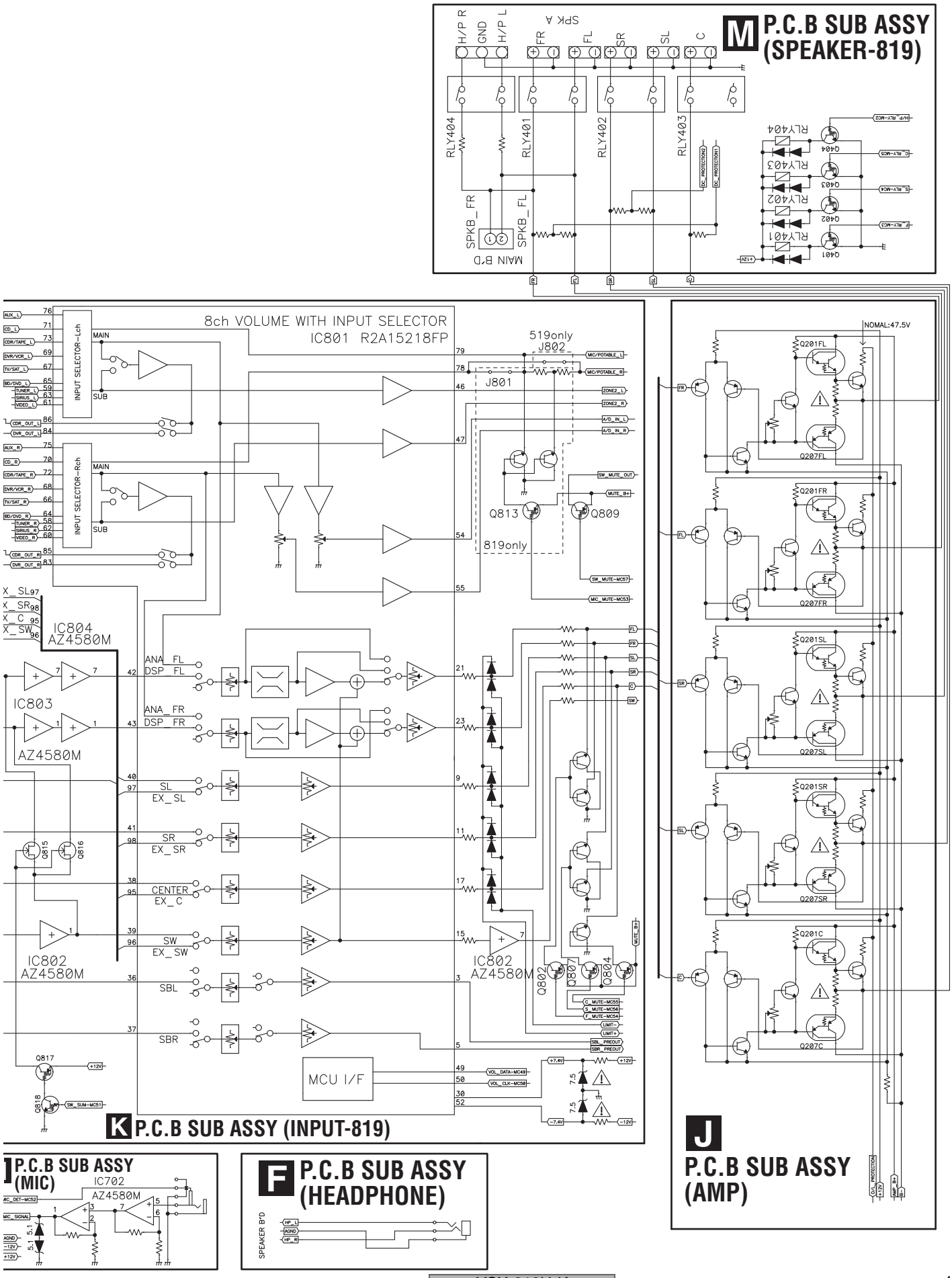
M P.C.B SUB ASSY (SPEAKER-819)
SPK A
H/P R
GND
H/P L
FR
FL
SR
SL
C
RLY404
RLY401
RLY402
RLY403
SPKB_FR
SPKB_FL
MAIN B'D
8ch VOLUME WITH INPUT SELECTOR
IC801 R2A15218FP
INPUT SELECTOR-Lch
INPUT SELECTOR-Rch
MAIN
SUB
519only
J802
J801
819only
Q813
Q809
IC804
AZ4580M
IC803
AZ4580M
IC802
AZ4580M
ANA_FL
DSP_FL
ANA_FR
DSP_FR
SL
EX_SL
SR
EX_SR
CENTER
EX_C
SW
EX_SW
SBL
SBR
MCU I/F
K P.C.B SUB ASSY (INPUT-819)
NOMAL:47.5V
Q201FL
Q207FL
Q201FR
Q207FR
Q201SL
Q207SL
Q201SR
Q207SR
Q201C
Q207C
J
P.C.B SUB ASSY (AMP)
I P.C.B SUB ASSY (MIC)
IC702
AZ4580M
F P.C.B SUB ASSY (HEADPHONE)
SPEAKER B'D

4.3 VIDEO BLOCK DIAGRAM

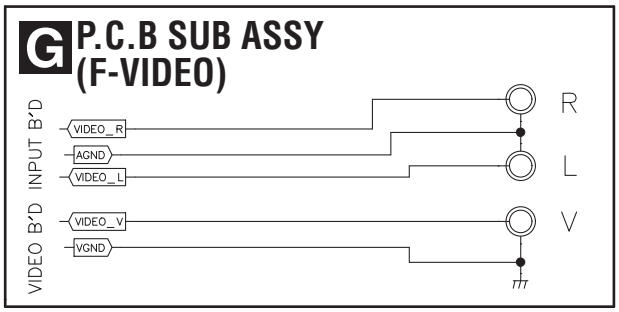

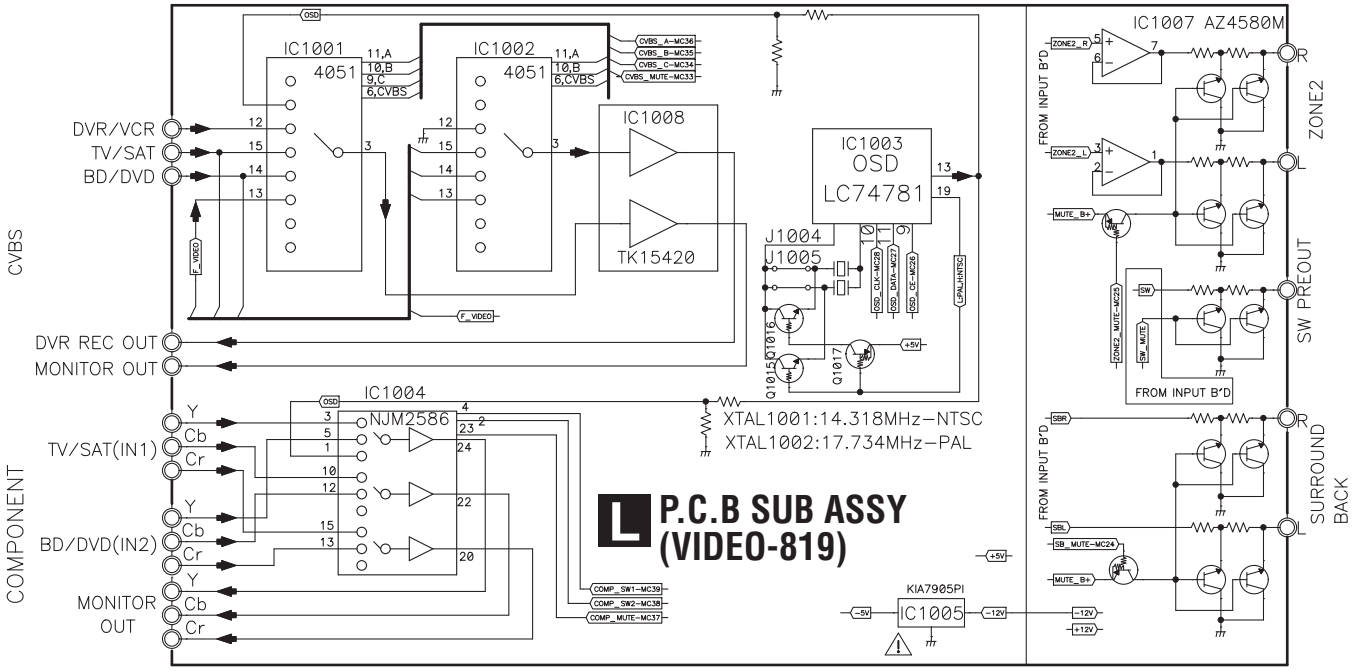

4.4 U-COM BLOCK DIAGRAM

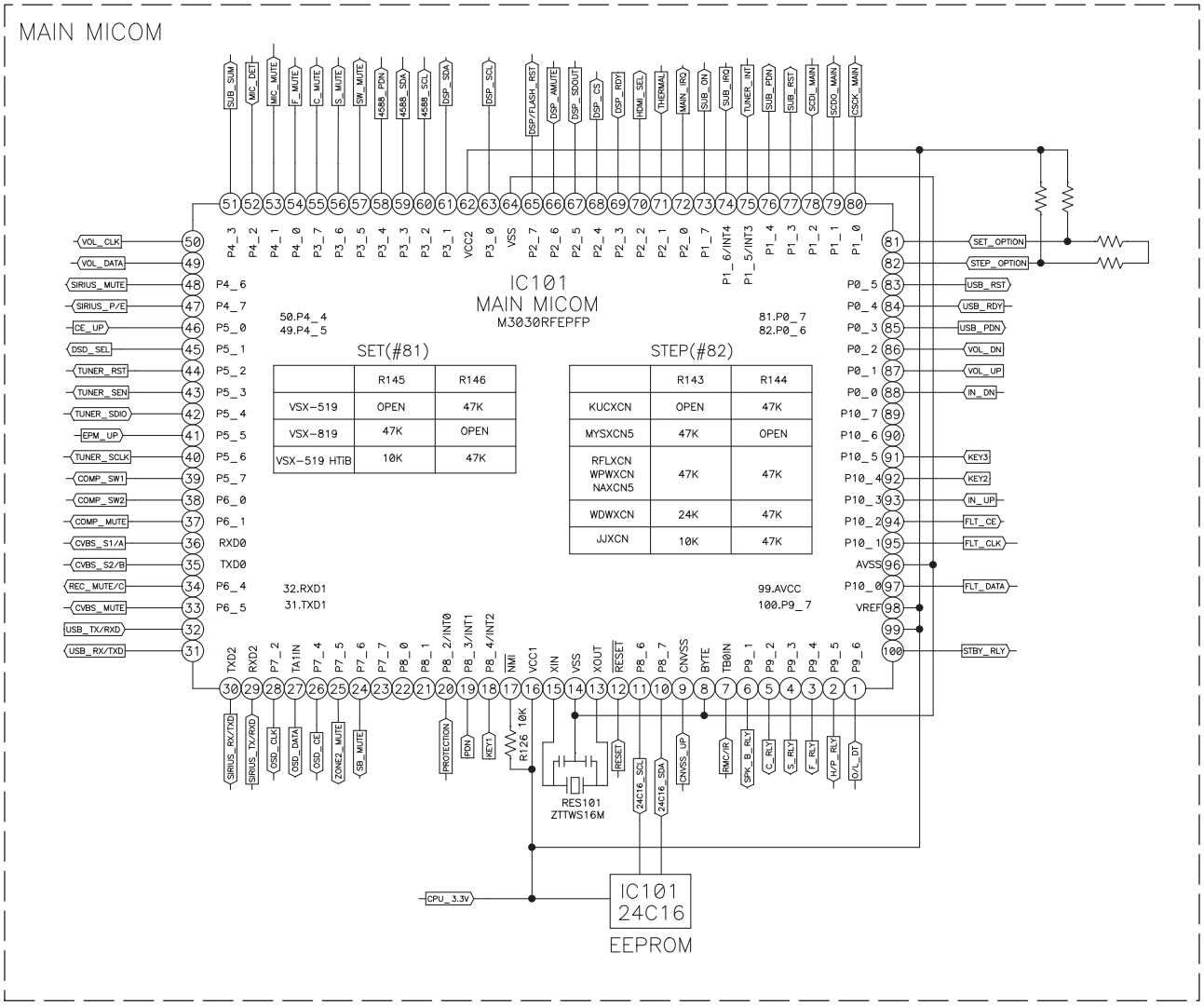

SET(#81)

	R145	R146
VSX-519	OPEN	47K
VSX-819	47K	OPEN
VSX-519 HTiB	10K	47K

STEP(#82)

	R143	R144
KUCXCN	OPEN	47K
MYSXCN5	47K	OPEN
RFLXCN WPWXCN NAXCN5	47K	47K
WDWXCN	24K	47K
JJXCN	10K	47K

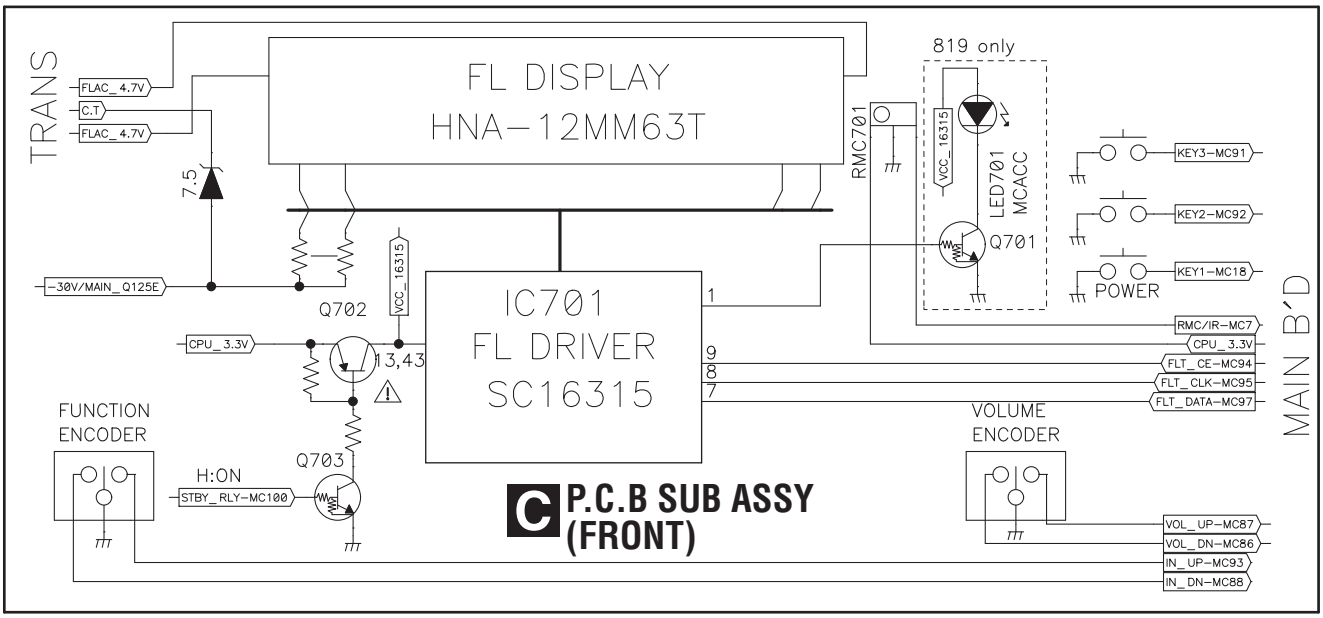

C P.C.B SUB ASSY (FRONT)

4.5 POWER SUPPLY BLOCK DIAGRAM

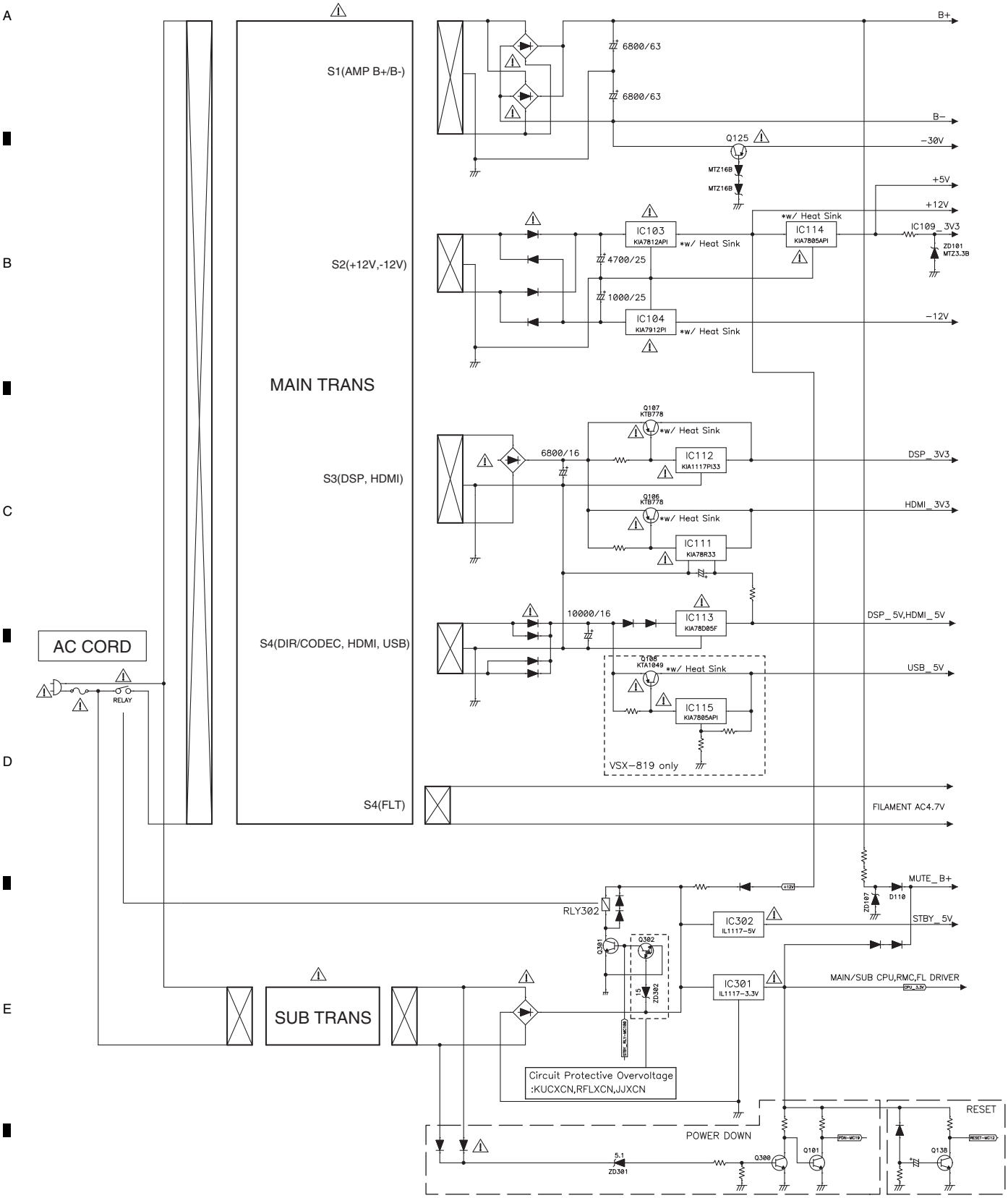

5. DIAGNOSIS
5.1 DIAGNOSIS FLOWCHART

[1] DSP TROUBLESHOOTING
■ Troubleshooting

Step 0: Preliminary confirmation

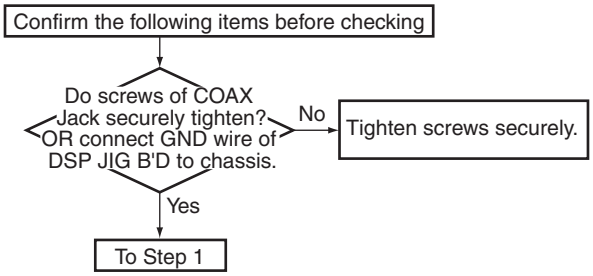

Step 1: BtoB connector

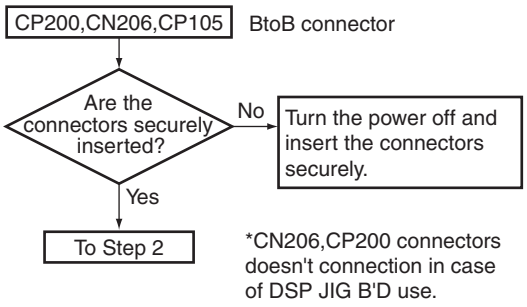

Step 2: Regulator IC

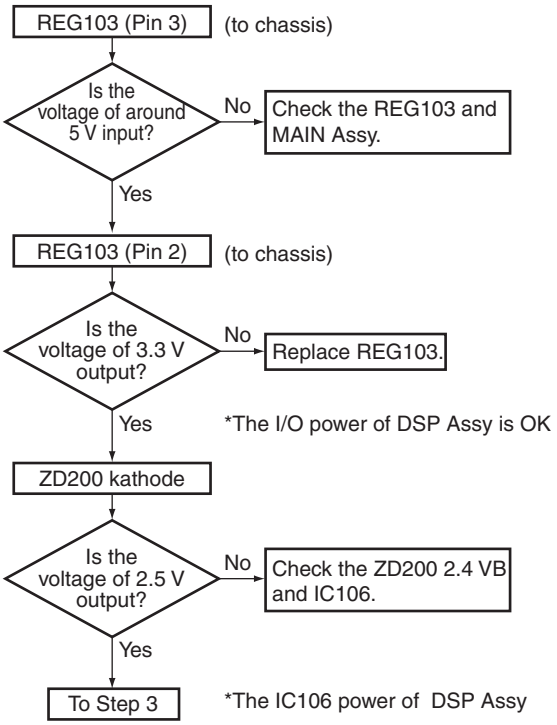

Step 3: Regulator IC

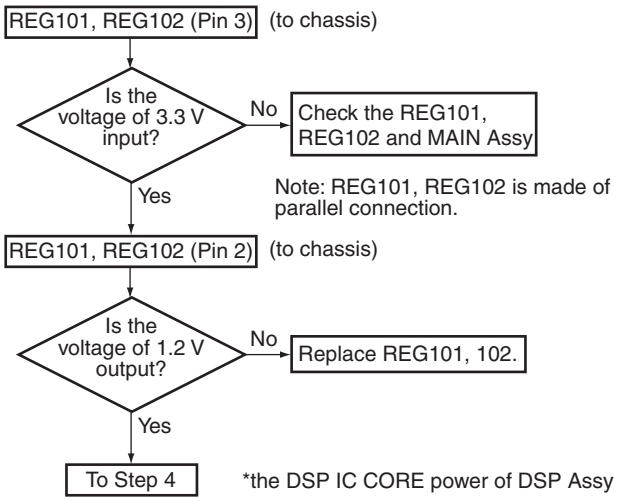

Step 4: X'tal

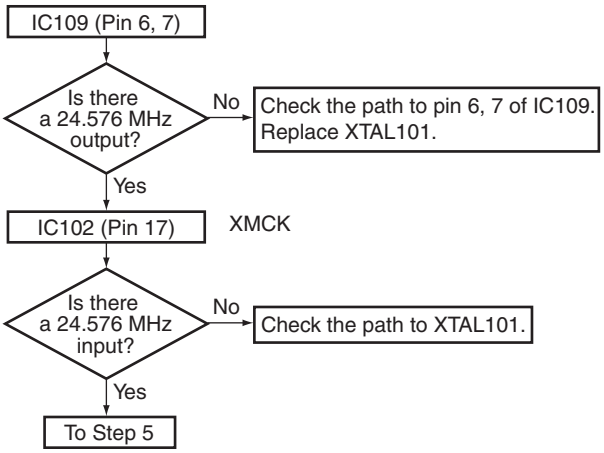

Step 5: DIR

Check that the S/PDIF signal is output.
Check that changes by pulling out and inserting the digital input lines.

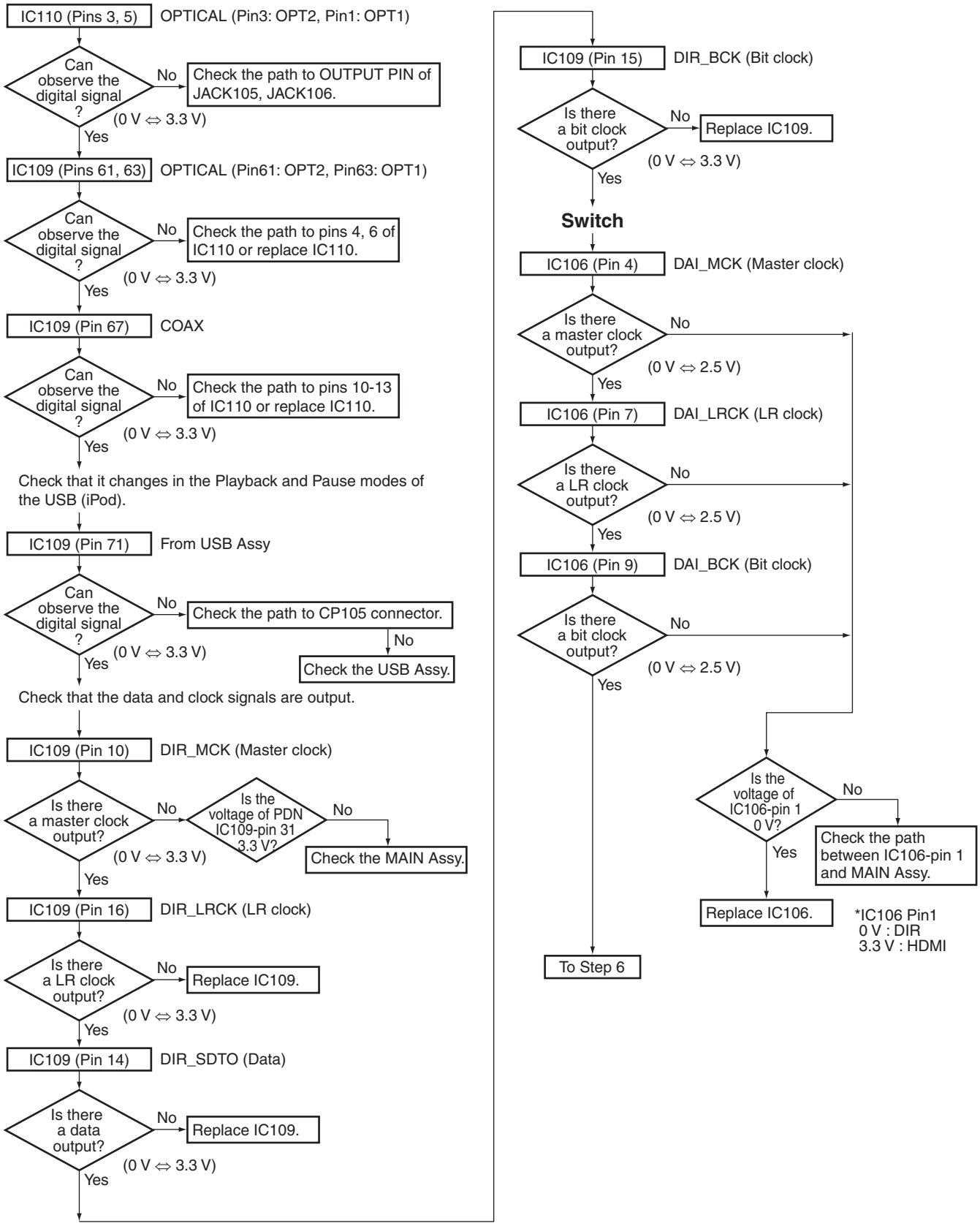

Step 6: DSP output (digital)

Digital output of each CH when inputting the digital signal with audio.

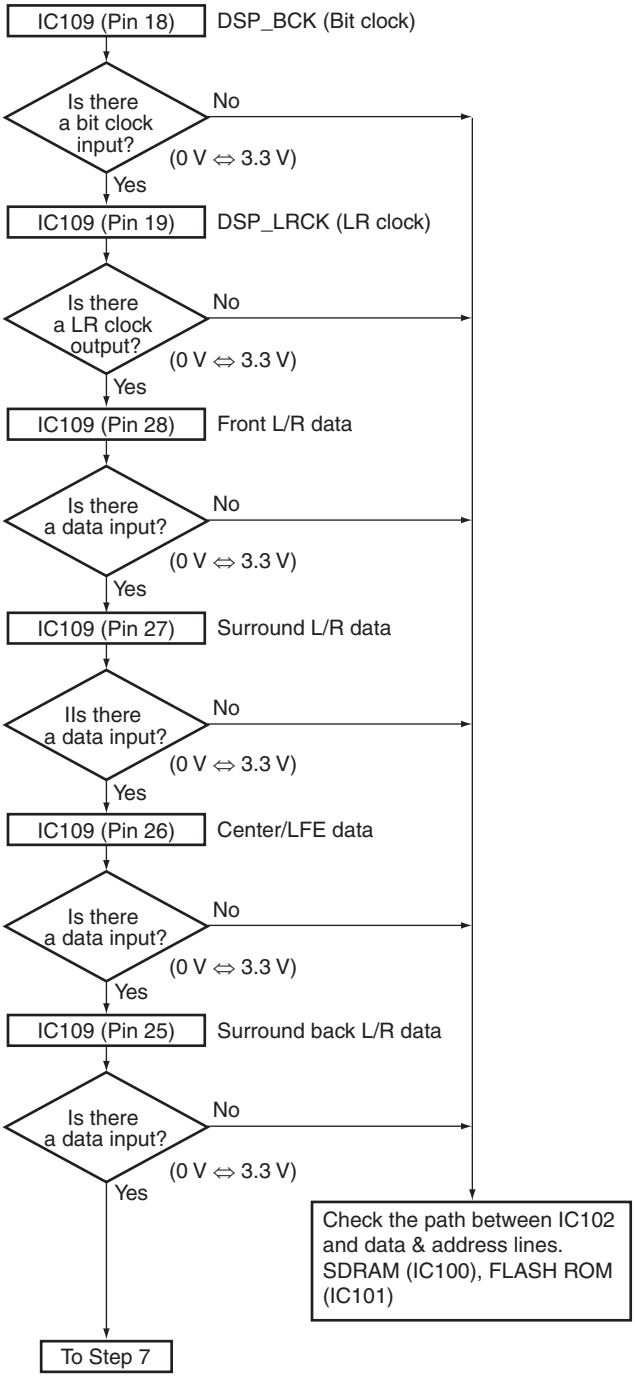

Step 7: Codec output (analog)

Analog output of each CH when inputting the digital signal with audio.

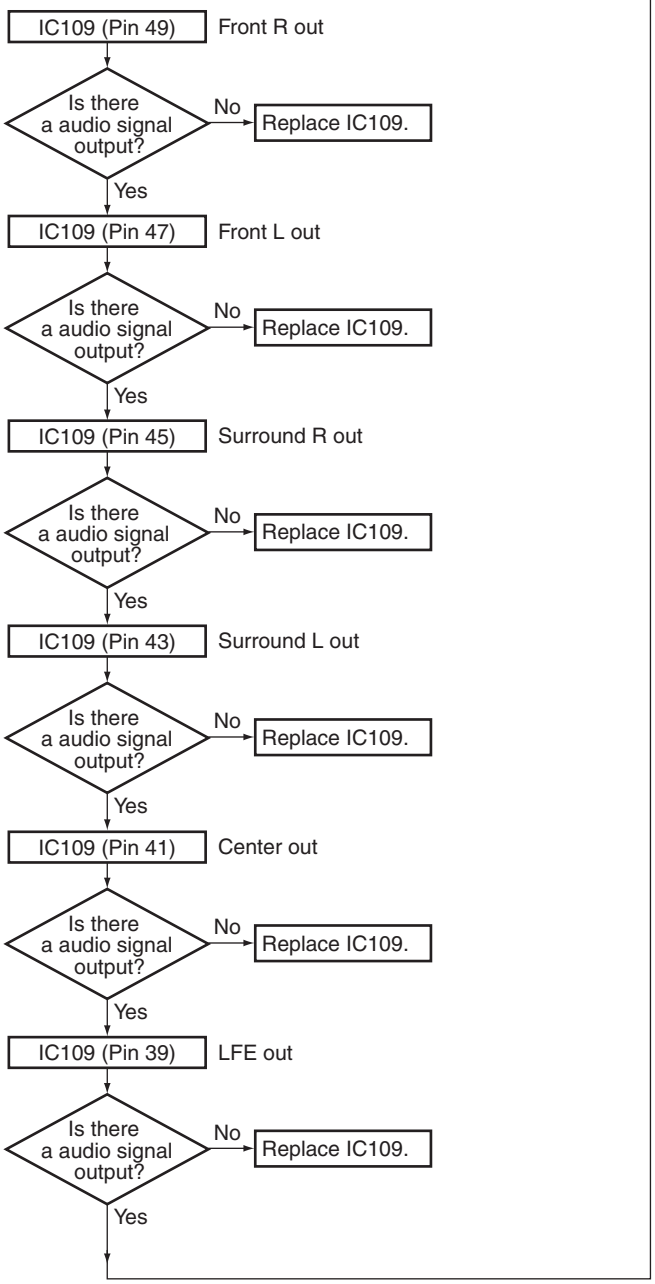

Analog output of each CH when inputting the digital signal (-∞ dB (no signal)).

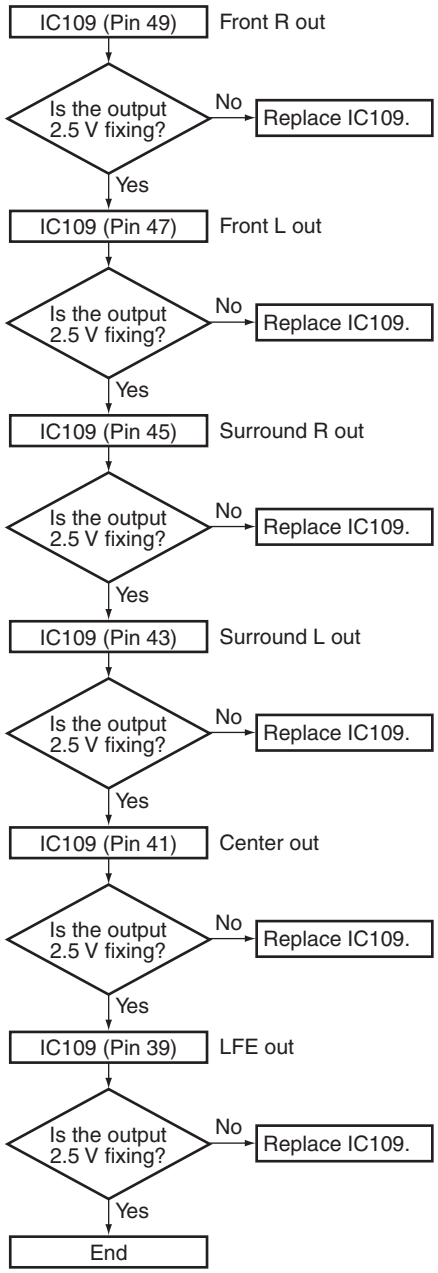

[2] HDMI TROUBLESHOOTING

1. Causes for noncompletion of HDMI authentication between the source equipment and this unit (the HDMI indicator is unlit or flashes)

■ HDMI Simple Diagnosis

Causes for no display or sound from the monitor

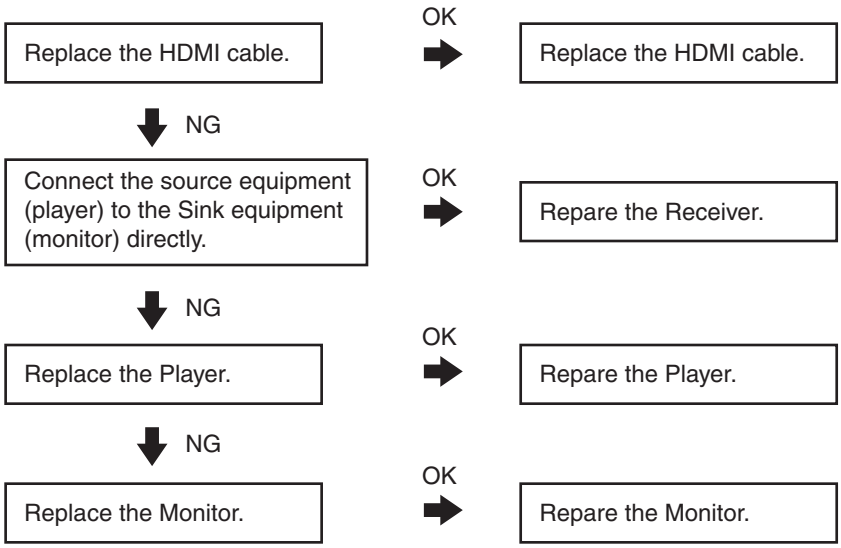

■ HDMI Troubleshooting

Step 0: Preliminary confirmation

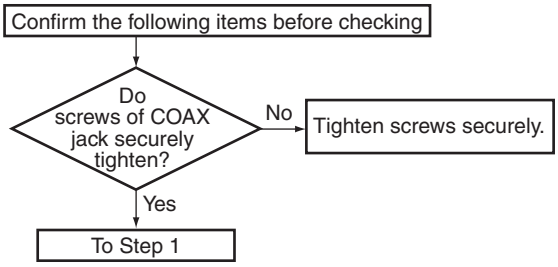

Step 1: Connect the HDMI equipment

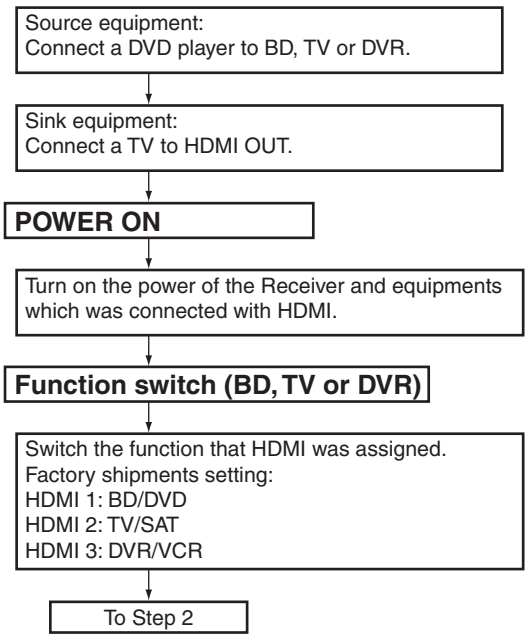

Step 2: Power supply

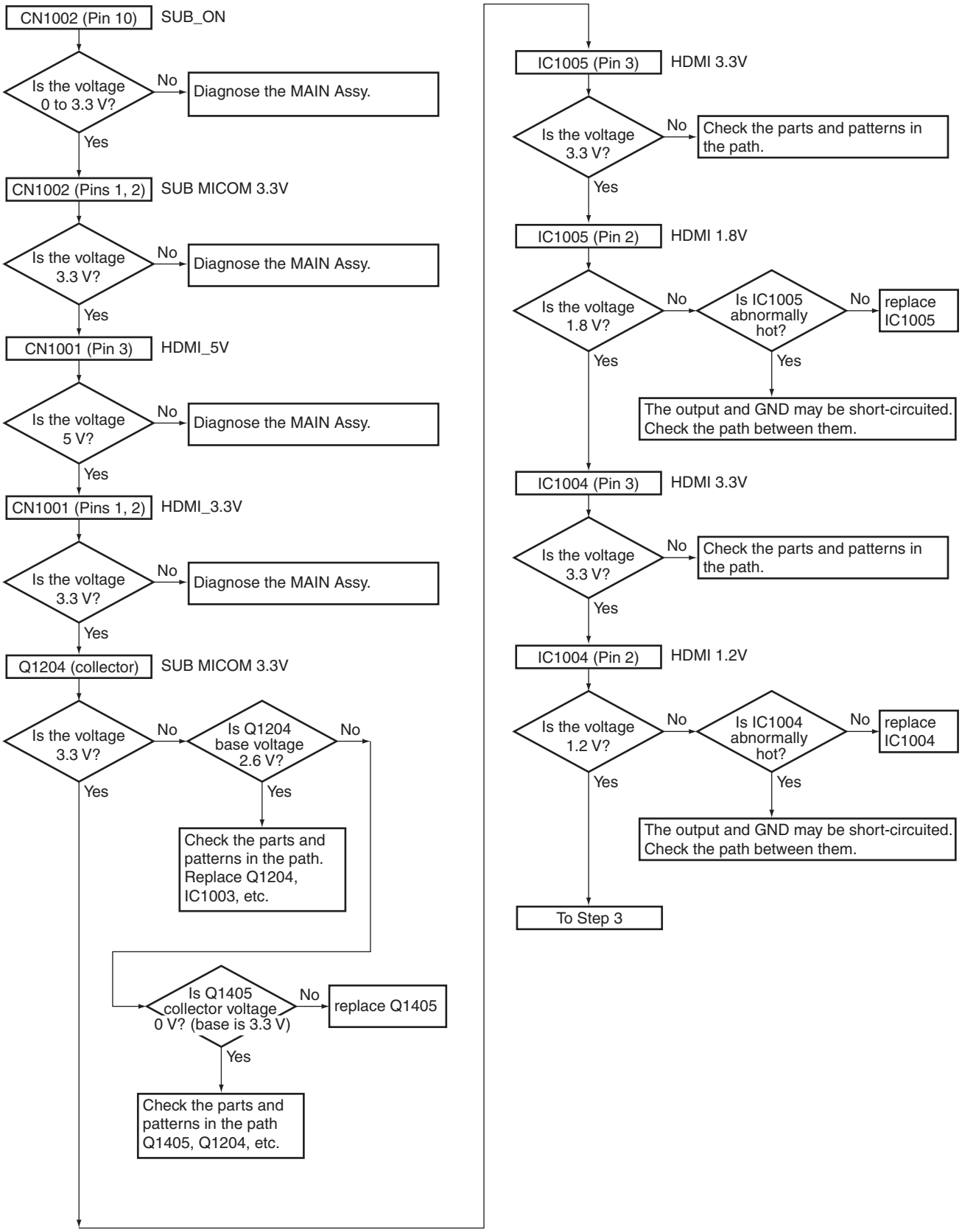

Step 3: Diagnosis

Each data lines confirmation checks it after standby OFF/ON.

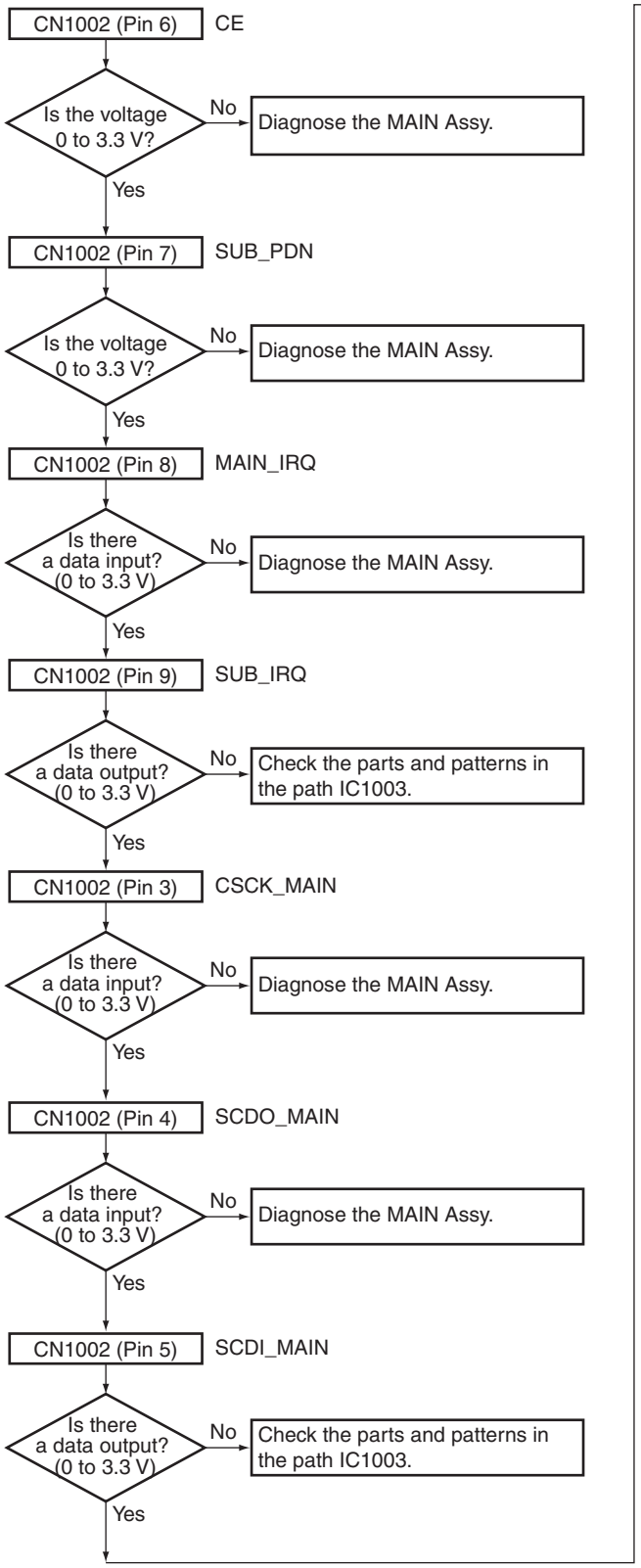

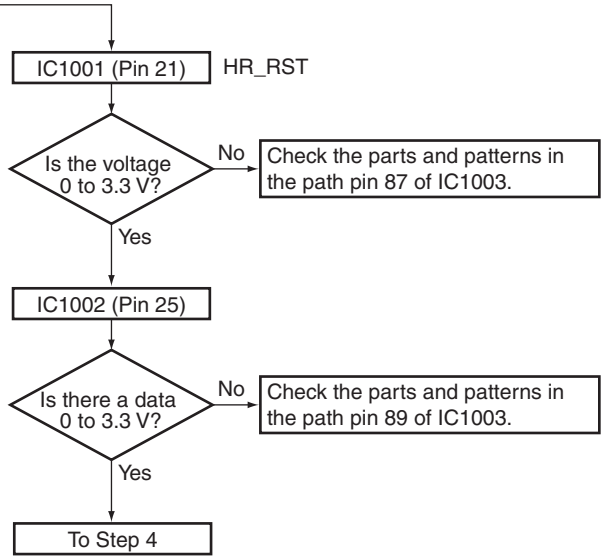

Step 4: X'TAL

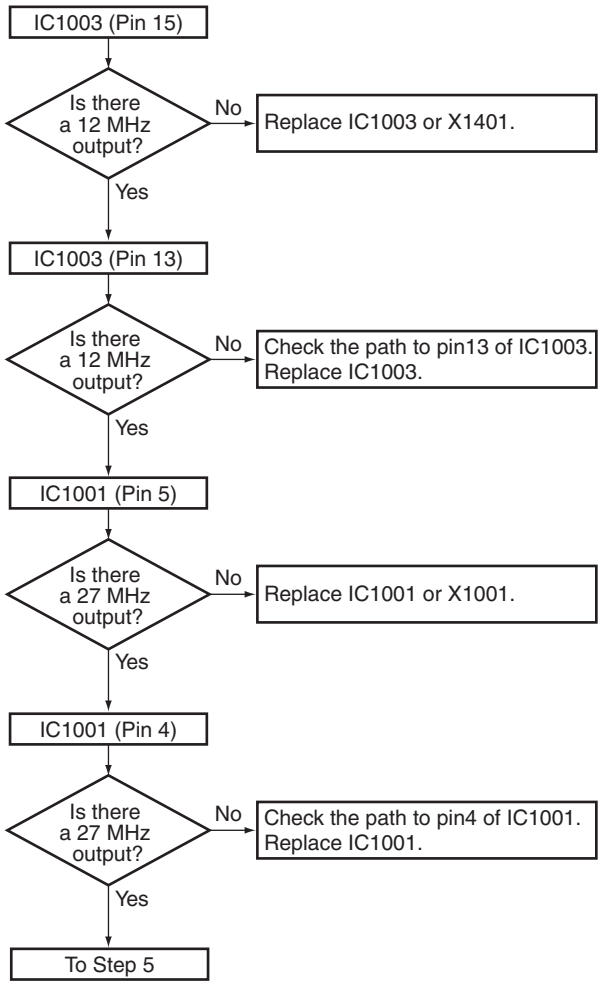

Step 5: IN/OUTPUT Diagnosis

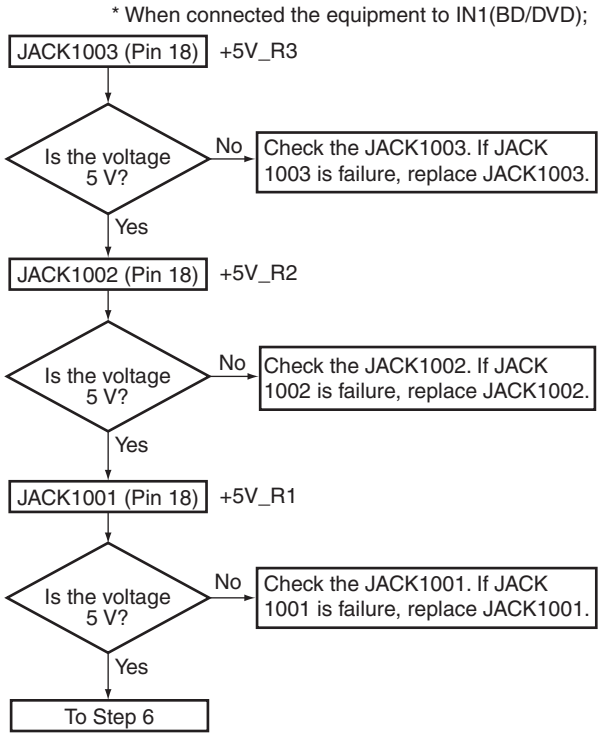

Step 6: Hot plug detect

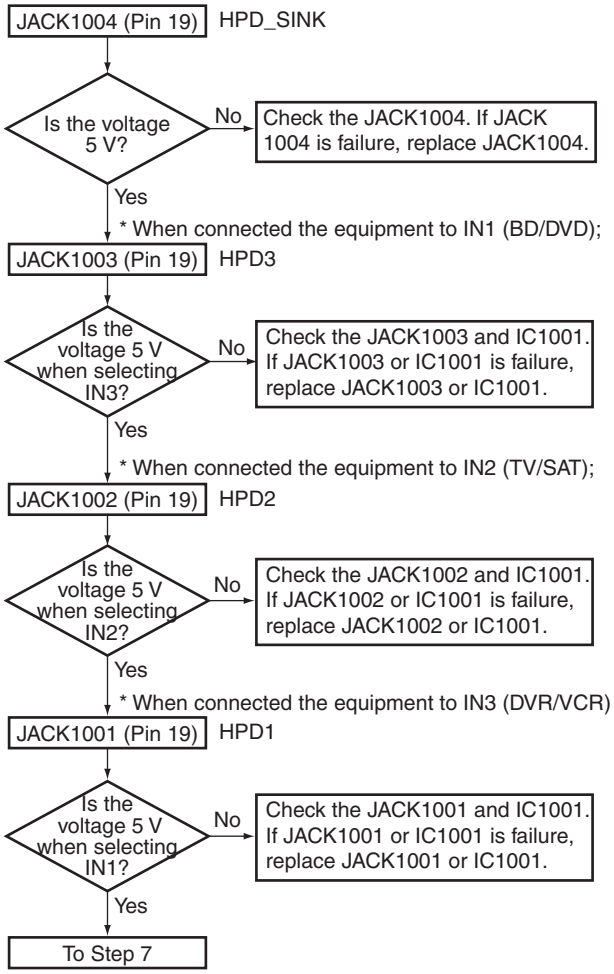

Step 7: SDA /SCL

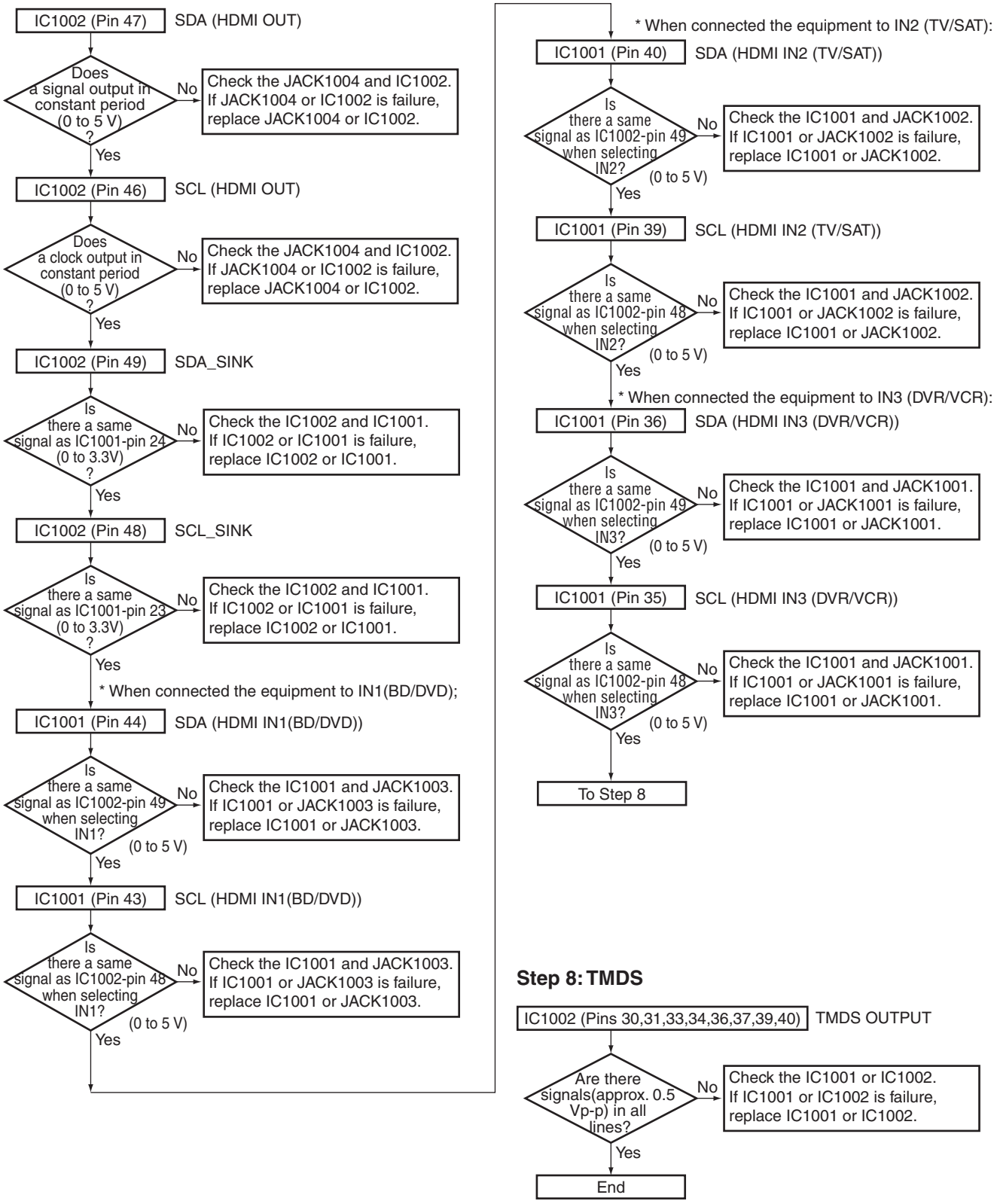

Step 8: TMDS

[3] USB iPod TROUBLESHOOTING

iPod Error Message

When the abnormality occurred, the error messages are indicated.

key sequence change	OSD display	FL display
Error 1 Communication Error When the communication is not possible normally. [Procedure] Disconnect a connector once, then connect a connector surely again after the main menu of the iPod was displayed. Nevertheless, reset the iPod when the iPod does not operate normally.	iPod iPod/USB Error 1	I/U ERR1
Error 2 Generation Error (in the Type 1 operation only) When the non-support model for the iPod Mode Type 1 was connected. When the non-support function will be executed. When a version of the iPod software is old. [Procedure] Change the iPod Mode to Type2. Update the iPod software to the newest version.	iPod iPod/USB Error 2	I/U ERR2
Error 3 Loading Error When there is no response from the iPod. [Procedure] The power is shut off once, then the unit back on. Reset the iPod. Update the iPod software to the newest version.	iPod iPod/USB Error 3	I/U ERR3
Error 4 OverHeat Error	iPod iPod/USB Error 4	I/U ERR4
No Track No Music Track Cautuion When a track does not exist in the selected category [Procedure] Select another category.	iPod No Track	NO TRACK

iPod Troubleshooting

Step 0: Preliminary confirmation

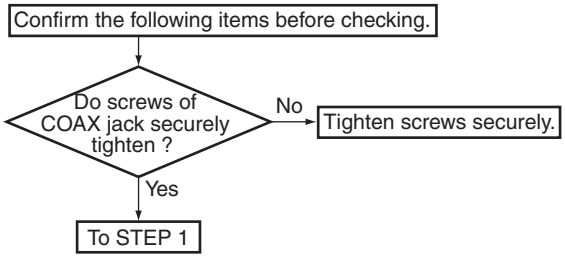

Step 1: Power supply

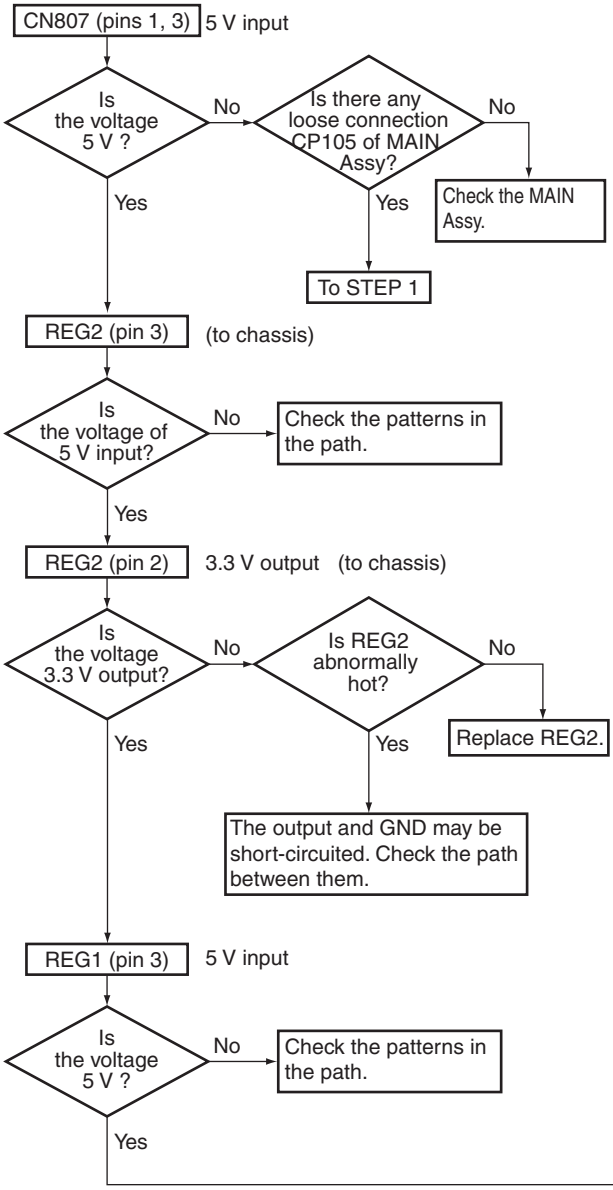

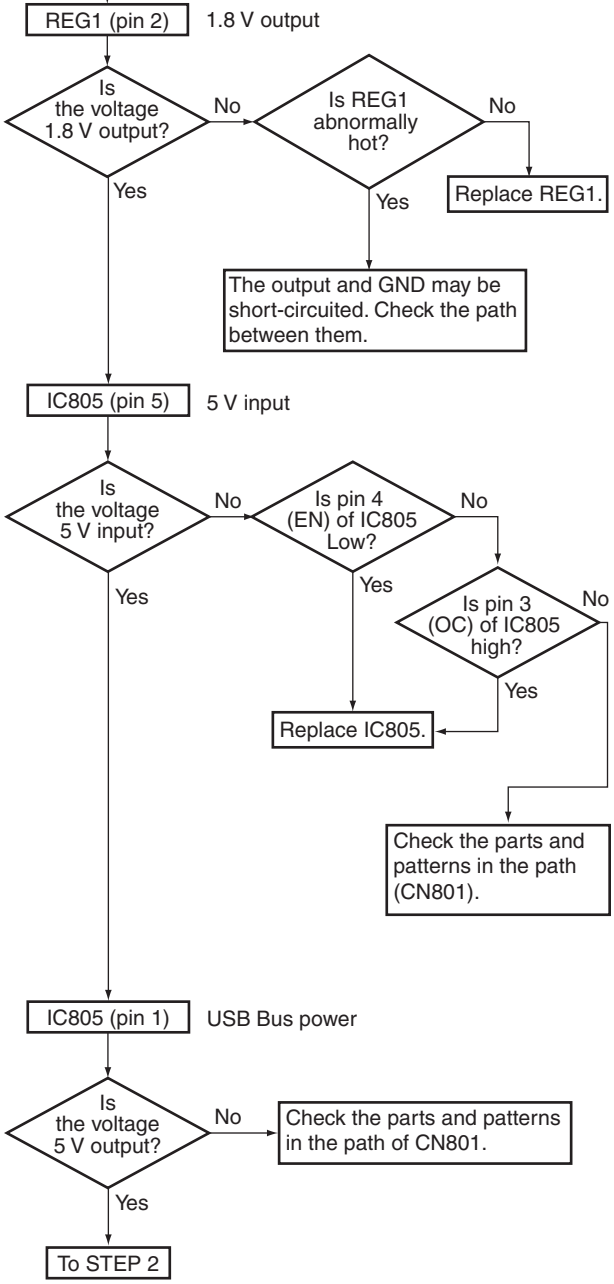

Step 2: Operation of USB Media control IC

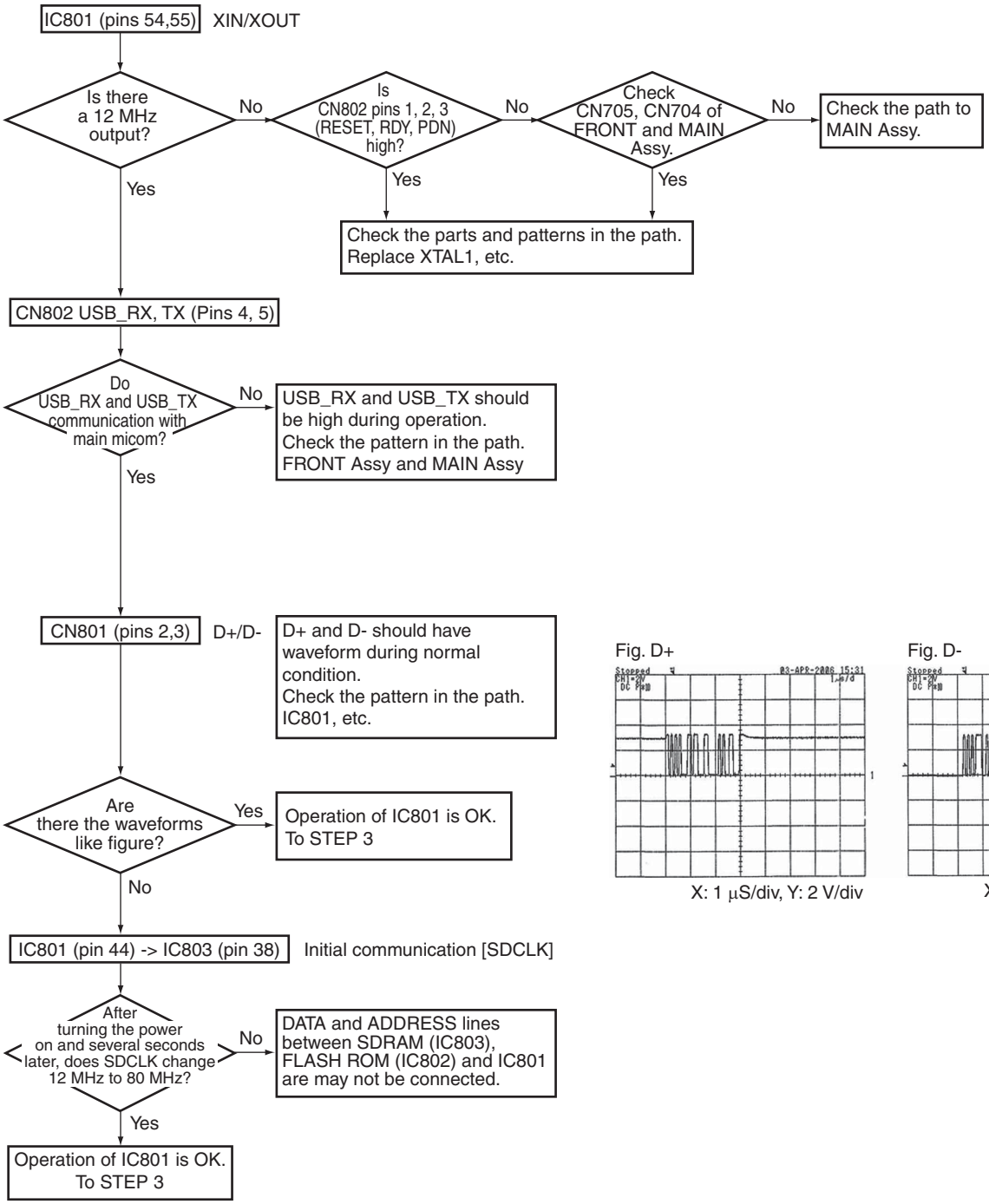

Fig. D+

X: 1 μS/div, Y: 2 V/div

Fig. D-

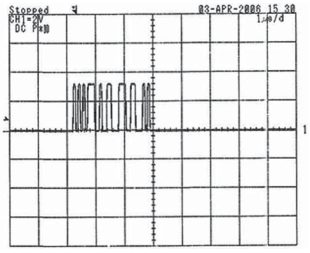

X: 1 μS/div, Y: 2 V/div

A

Step 3: Operation of iPod (Authentication process)

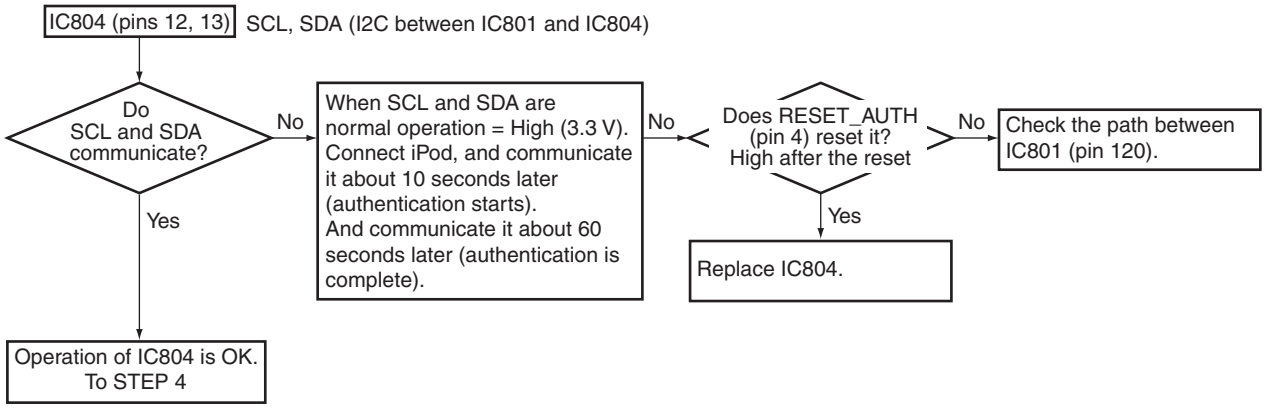

B

Step 4 Audio Out check

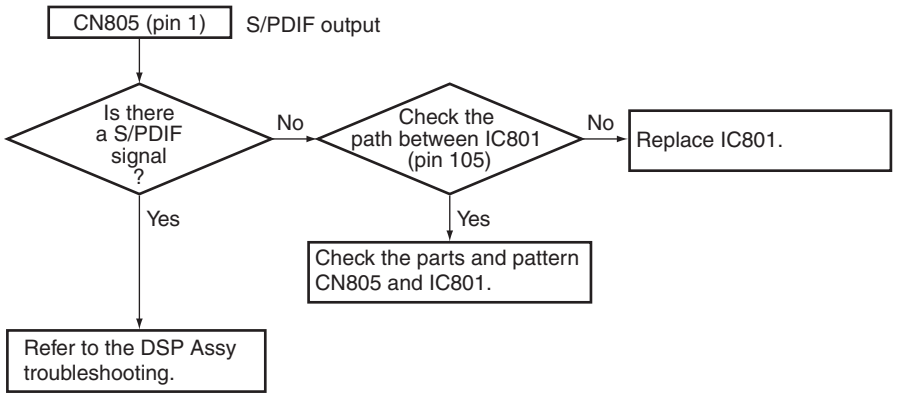

C

D

E

F

5.2 DETECTION CIRCUIT

[1] DC Protection Circuit Diagram

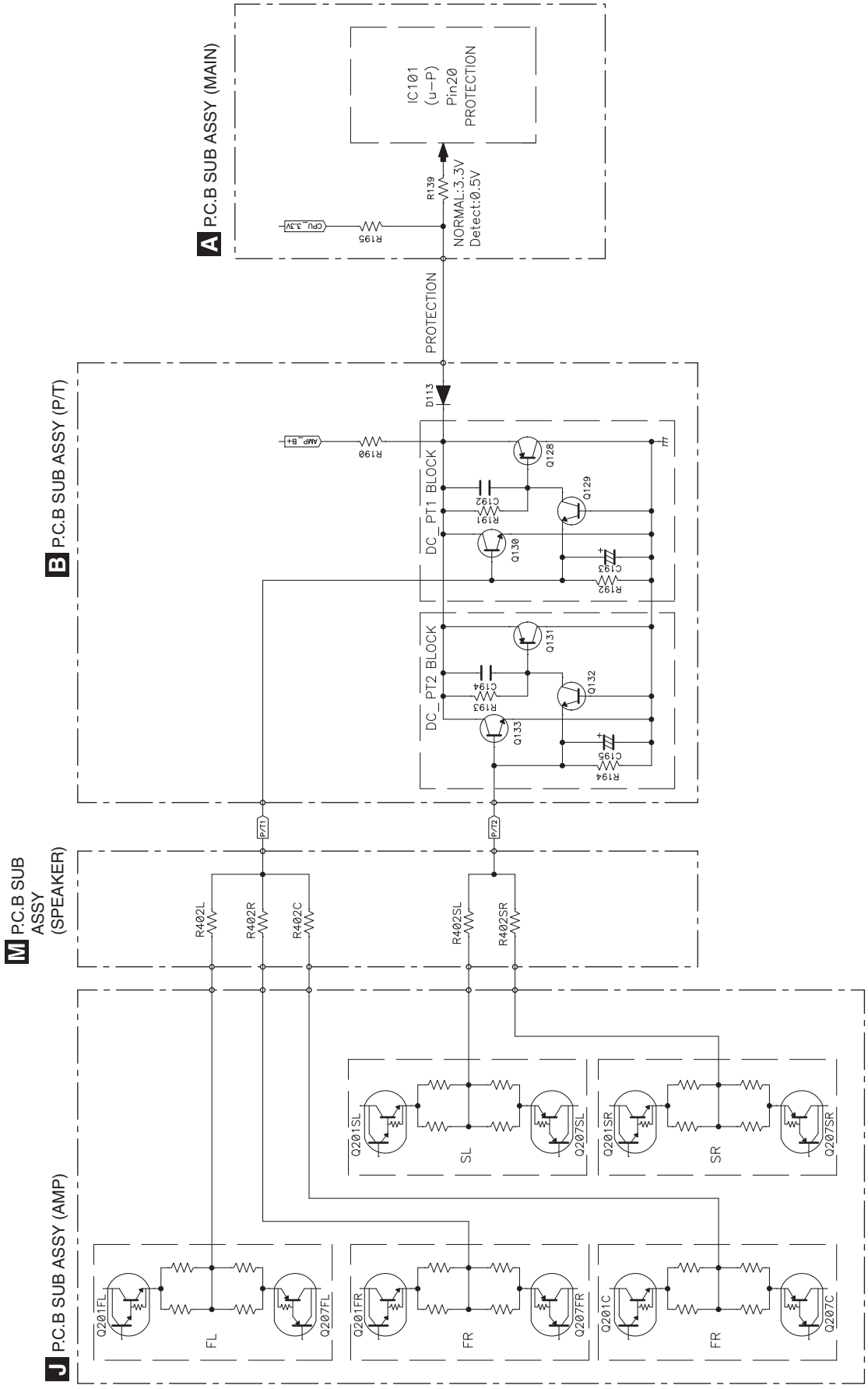

[2] Overload Protection Circuit Diagram

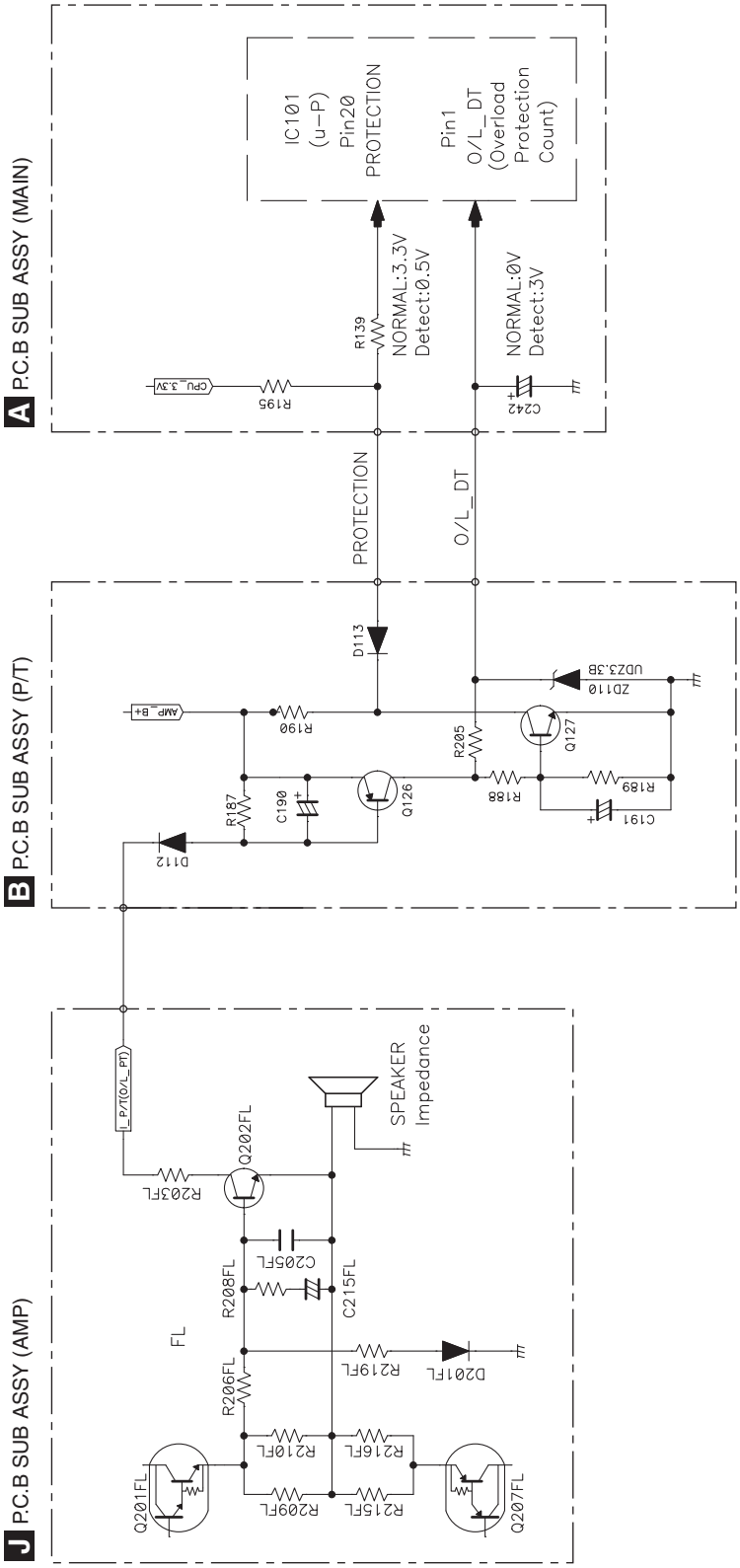

[3] Power DC Protection Circuit Diagram

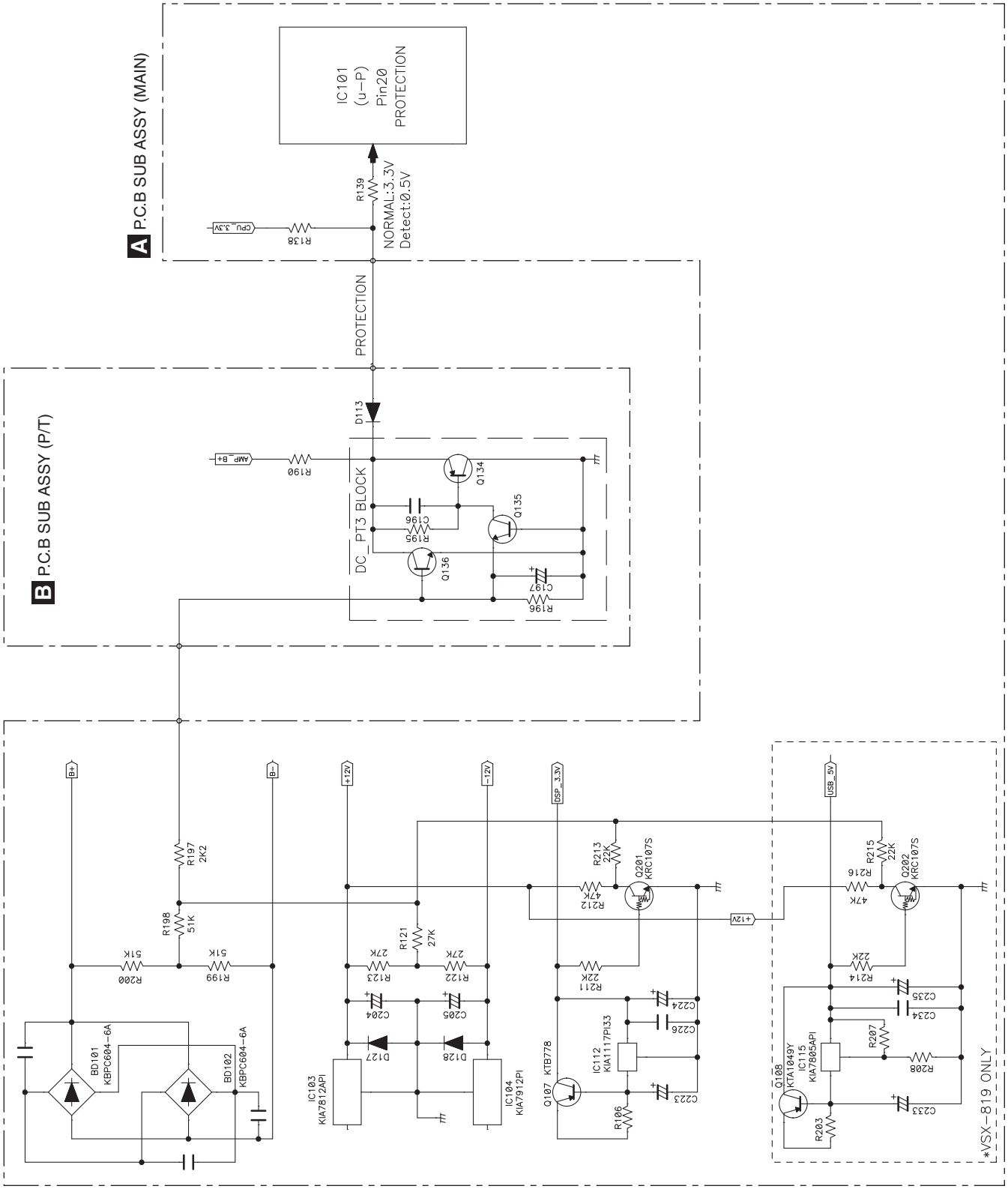

6. SERVICE MODE
6.1 SERVICE MODE

[1] Display mode for numbers of protection detections

[Purpose]

The numbers of detections for various protection processes are displayed.

[How to enter/exit]

During Standby mode, simultaneously press and hold the [PRESET –] and [STANDBY/ON] keys for 2 seconds to enter this mode.
The display will return to the normal indication when no key operation is performed for 5 seconds.

[Basic operations]

Key Operation	FL Display	Time (sec.)	Description of Indications
(STANDBY state)			
[PRESET –] + [STANDBY/ON] (Initial display)	DC 005 *2 → Counter	5 (-> normal) *1	Number of DC error detections
[ENTER key]	OVER 003 *2 → Counter	5 (-> normal) *1	Number of OVERLOAD error detections
[ENTER key]	TEMP 007 *2 → Counter	5 (-> normal) *1	Number of abnormal-temperature error detections
[ENTER key] (Initial display)			

*1 "5 (-> normal)" denotes that the display will return to the normal indication when no key operation is performed for 5 seconds.
*2 Variable range: 0-255

[2] Reset mode for numbers of protection detections

[Purpose]

For clearing all the counts of protection detections.
(This mode resets the counts of protection detections.)

[How to enter/exit]

During Standby mode, simultaneously press and hold the [STANDARD SURROUND] and [STANDBY/ON] keys for 10 seconds to enter this mode.
The display will return to the normal indication when no key operation is performed for 5 seconds.

[Basic operations]

Key Operation	FL Display	Time (sec.)	Description of Indications
(STANDBY state)			
[STANDARD SURROUND] + [STANDBY/ON] (press and hold the keys for 10 seconds.)	CLEAR?	5 (-> normal) *1	
[ENTER key] ↓	↓		
(Counter Clear end)	0 K	5 (-> normal) *1	
(Normal display)	BD/DVD *2	usually	

*1 "5 (-> normal)" denotes that the display will return to the normal indication when no key operation is performed for 5 seconds.
*2 Indication when the BD/DVD function is selected

[Detailed explanations]

1. When the procedures for Reset mode for numbers of protection detections are completed, all the counters will be reset to "000."
2. Prohibitions:
   The protection detection counts cannot be cleared (reset to 000) with the MEMORY CLEAR process.
   They can only be cleared when the procedures of Reset mode are completed.

[3] The unit's operation when a error is detected

[Purpose]

- The unit's operation when a DC/OVER/TEMP error is detected is described here.
- How to cancel the status after detection of a DC error is described here, because no key input will be accepted after a DC error detection.

[Basic operations]

3.1 DC (AMP is abnormality) error detection

Key Operation	FL Display	Time (sec.)	Description of Indications
(Normal display)	BD/DVD	usually	Normal display
(DC detection)	BD/DVD		
↓ (Auto)			
(RECEIVER POWER OFF) *1, *2			

3.2 OVERLOAD (overcurrent) error detection

Key Operation	FL Display	Time (sec.)	Description of Indications
(Normal display)	BD/DVD	usually	Normal display
(OVERLOAD detection)	BD/DVD		
↓ (Auto)			
(RECEIVER POWER OFF) *1			

3.3 TEMP (AMP overheat) error detection

Key Operation	FL Display	Time (sec.)	Description of Indications
(Normal display)	BD/DVD	usually	Normal display
(TEMP detection)	BD/DVD		
↓ (Auto)			
(RECEIVER POWER OFF) *1			

*1 The time required for the unit to be shut off after an error is detected depends on the circuit configuration.
*2 If the unit is automatically shut off after a DC error is detected, no key input will be accepted afterward.
(The power will not be turned ON.)
To turn it on again, see "3.4 How to cancel the status after detection of a DC error" below.
A key input will not be inhibited after an OVERLOAD/TEMP error is detected. (The unit can be turned ON.)

3.4 How to cancel the status after detection of the DC error

Key Operation	FL Display	Time (sec.)	Description of Indications
(STANDBY state) [ADVANCED SURROUND] + [STANDBY/ON] (press and hold the keys for 2 seconds.)			
↓			
(Normal display)	BD/DVD	usually	Normal display

[Detailed explanations] Simultaneously holding the [ADVANCD SURROUND] and [STANDBY/ON] keys on the front panel pressed for 2 seconds will cancel Key Input Inhibition mode after a DC error detection and turn the unit ON.

7. DISASSEMBLY
7.1 DISASSEMBLY

Note 1: Even if the unit shown in the photos and illustrations in this manual may differ from your product, the procedures described here are common.
Note 2: For performing the diagnosis shown below, the following jigs for service is required:
- 10P board to board extension jig cable (GGD1628)
- 8P board to board extension jig cable (GGD1629)
- Board to board extension jig cable (GGD1630)

1. Discharging

[1] P.C.B SUB ASSY (MAIN) Capacitor (C179, C180)

[Procedures]

(1) Unplug the power cord.
(2) Disconnect the 8P CONNECTOR wire that connects the CN202 of the P.C.B SUB Assy (AMP) and CP107 of the P.C.B SUB Assy (MAIN) from the CP107.
(3) Connect CP107 B+ (Pins 5 and 6) and B- (Pins 7 and 8, respectively) terminals, using resistor leads with 47-100 ohms (2 W or higher), for discharging.
*Discharging time: 30-60 seconds, depending on the level of resistance.
(4) Check that the voltage between the B+ and GND terminals, as well as that between the B- and GND terminals, is less than 1 V, using a tester.
*Be sure to connect the GND terminal of the tester to the chassis.
*If the voltage is still 1 V or higher, repeat Step (3).

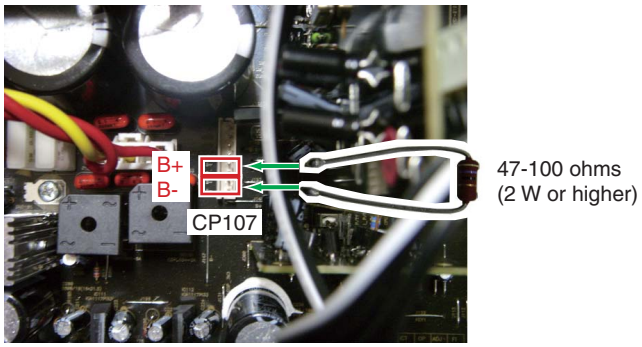

[2] FL-30 V Capacitor

[Procedures]

(1) Unplug the power cord.
(2) Connect CP704 -30 V (Pins 1 and 2) of the P.C.B SUB Assy (FRONT) and GND (Pins 3 and 4, respectively), using resistor leads with 47-100 ohms (2 W or higher), for discharging.
*Discharging time: 5-10 seconds, depending on the level of resistance.
(3) Check that the voltage between the -30 V and GND terminals is less than 1 V, using a tester.
*Be sure to connect the GND terminal of the tester to the chassis.
*If the voltage is still 1 V or higher, repeat Step (2).

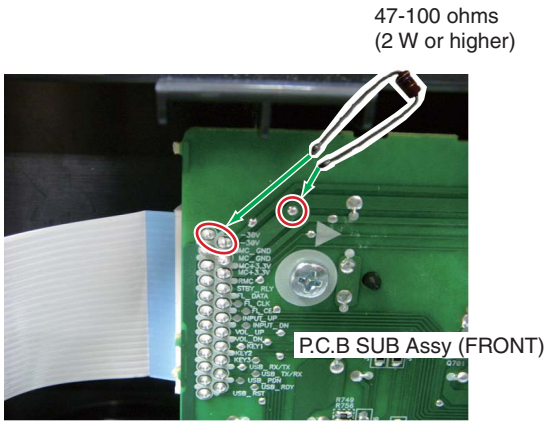

2. Notes on Ground Points Connection

[Note 1]

When reassembling after disassembling the product for repair, before connecting the power cord, make sure that the 2P wire from the CN206 of the P.C.B SUB Assy (DSP) is connected to the CP803 of the P.C.B TOTAL Assy (INPUT).

If the power is turned ON without the above connection, the CODEC IC (IC109: AK4588) of the P.C.B SUB Assy (DSP) may be damaged.

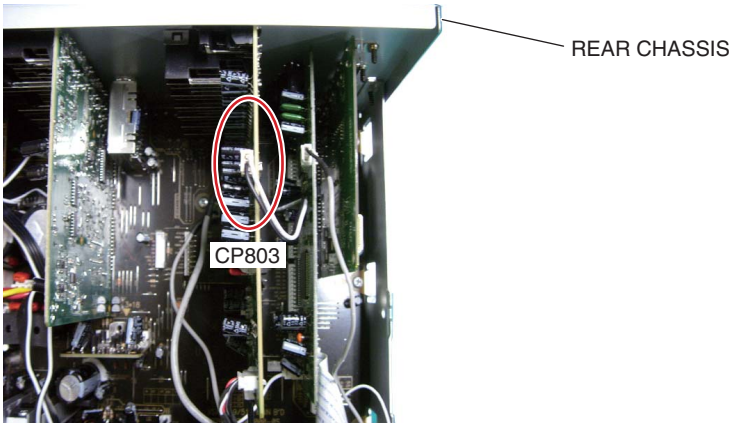

[Note 2]

During repair, before checking the P.C.B SUB Assy (MAIN), etc., with the rear chassis removed, be sure to connect the GND terminal of the main capacitor to the rear chassis (TUNER PACK CHASSIS), as shown below, then connect the power cord.

Without grounding connection, the protection circuit will be activated.
After repairing, be sure to remove the ground wire before reassembling.

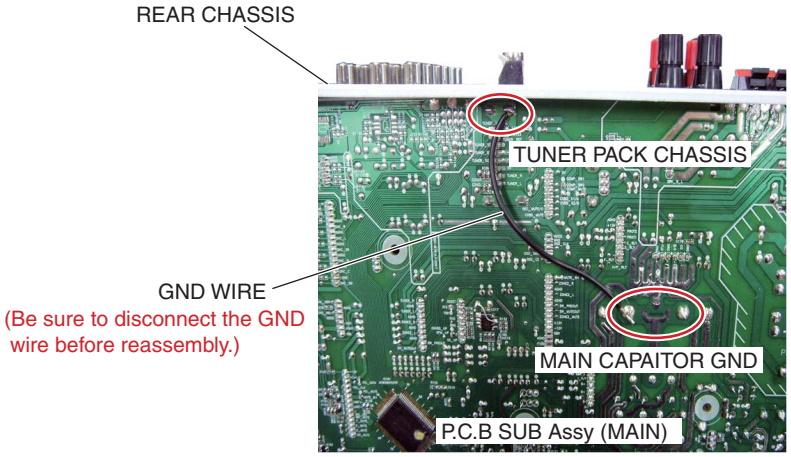

3. Diagnosis of PCB's

[1] Front Panel Section

Remove the bonnet by removing the 10 screws.

1. Remove the five screws. (BBZ30P080FTB)

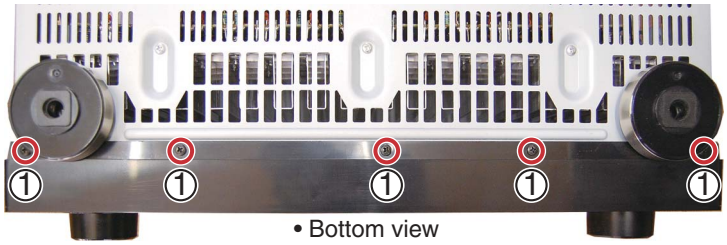

• Bottom view

2. Remove the two screws. (BBZ30P080FTC)

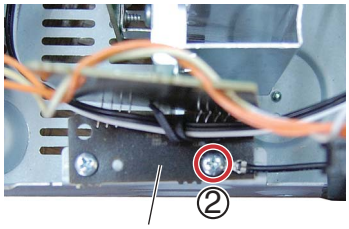

P.C.B SUB Assy
(GUIDE PCB L)

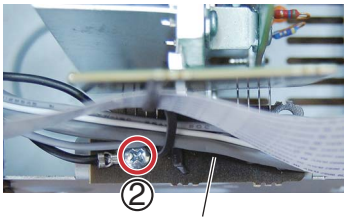

P.C.B SUB Assy
(GUIDE PCB R)

3. Remove the two screws.
4. Unhook the two hooks.
5. Arrange the front panel section as shown in the photo below.

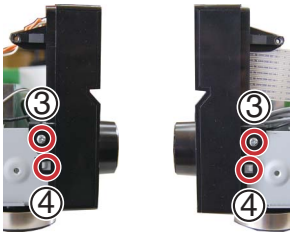

Front panel section

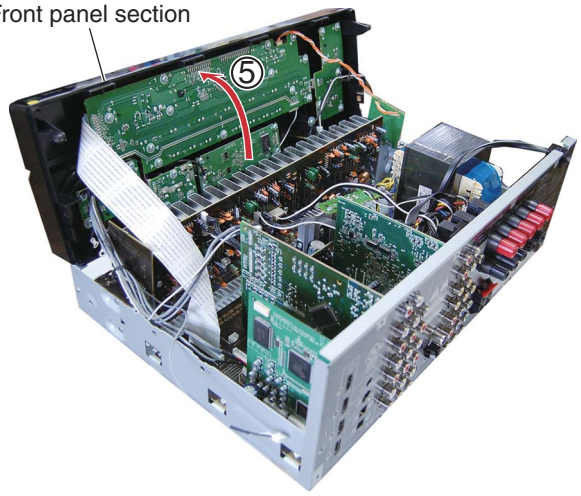

[2] Heat sink Section

Caution: Heat sink section in work becomes hot, and be careful with it.

Remove the bonnet by removing the 10 screws.

1. Remove the seven screws. (BBZ30P080FTC)

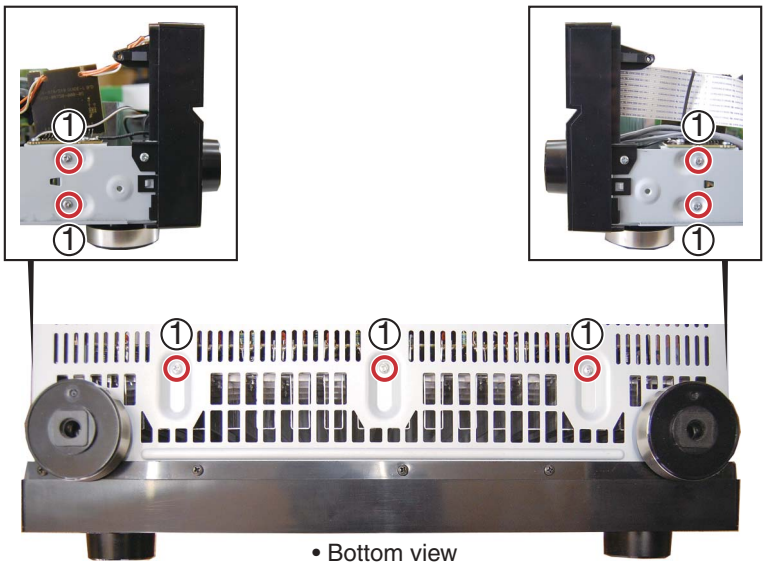

2. Remove the four screws. (BBZ30P080FTC)

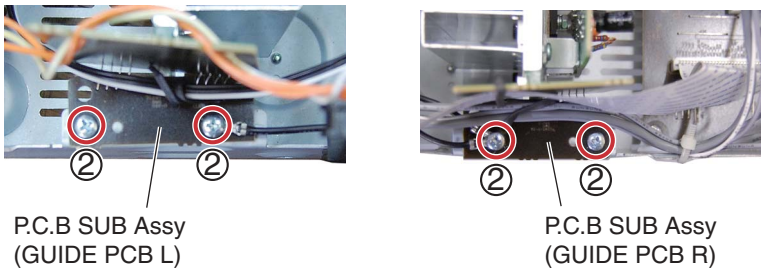

3. Disconnect the two connectors.

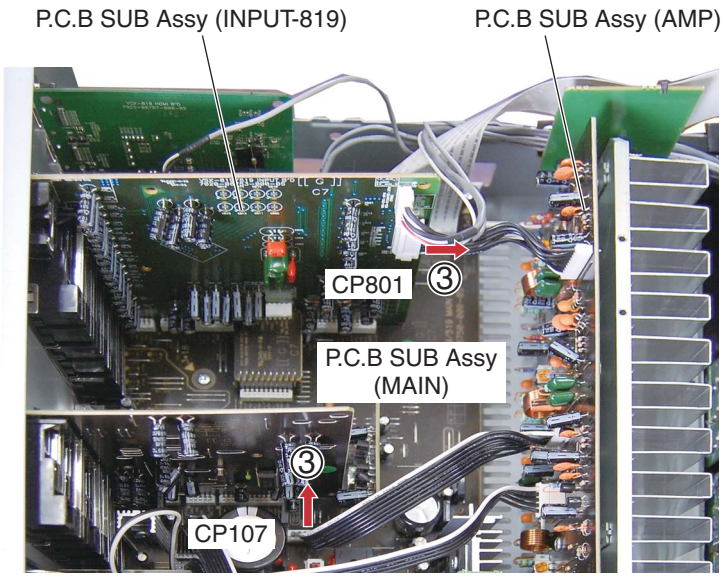

4. Connect the two extension jig cables.
5. Rotate the heat sink section in the direction of the arrow.

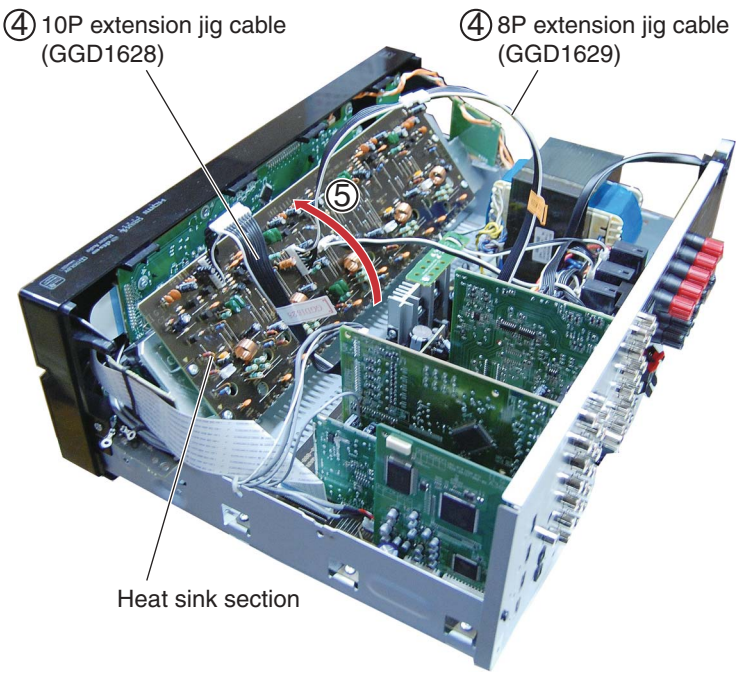

Note:
The Power transistor and heat sink on the P.C.B SUB Assy (MAIN) come closer.
Make sure that they will not come into contact.

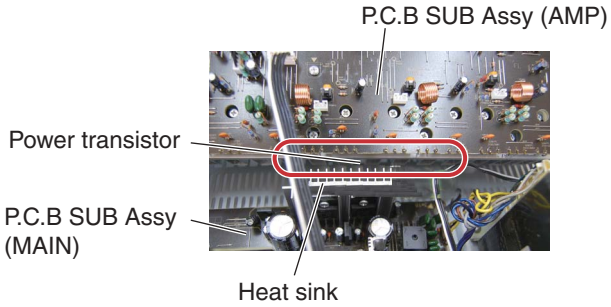

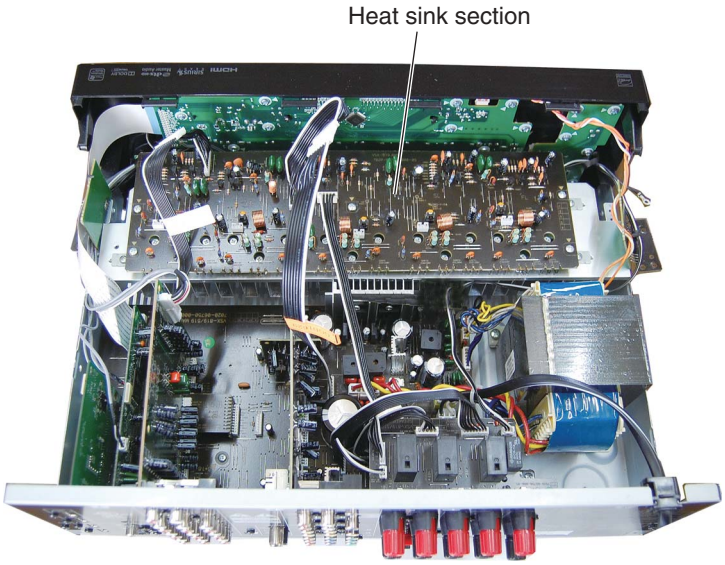

[3] P.C.B SUB Assy (MAIN)

Remove the bonnet by removing the 10 screws.

1. Remove the five screws. (BBT30P100FTB)

• Rear view

2. Remove the three screws. (BBZ30P080FTC)
3. Remove the six screws. (BBZ30P180FTC)

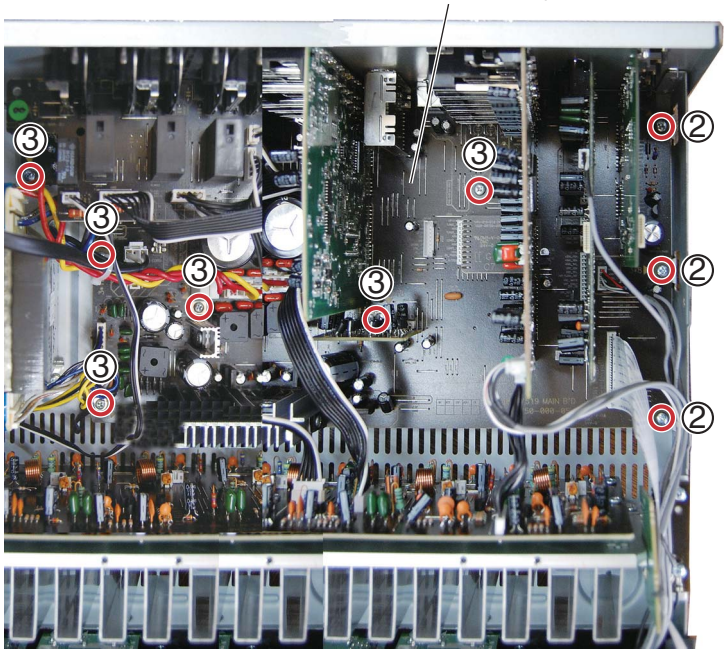

4. Arrange the unit as shown in the photo below.
5. Connect the chassis ground.
   See **"2. Notes on Ground Points Connection".**

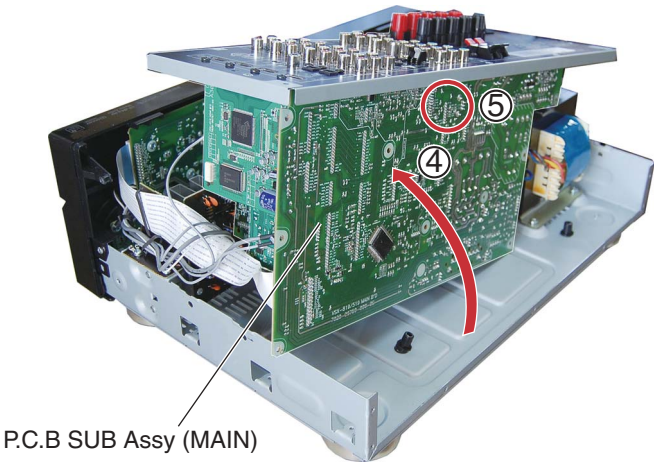

[4] P.C.B SUB Assy (DSP)

Remove the bonnet by removing the 10 screws.

1. Remove the four screws. (B020930083B10-IL)
2. Remove the one screw. (BMZ30P100FTB)
3. Remove the 22 screws. (BBT30P100FTB)
4. Remove the five screws. (BBT30P100FTB)

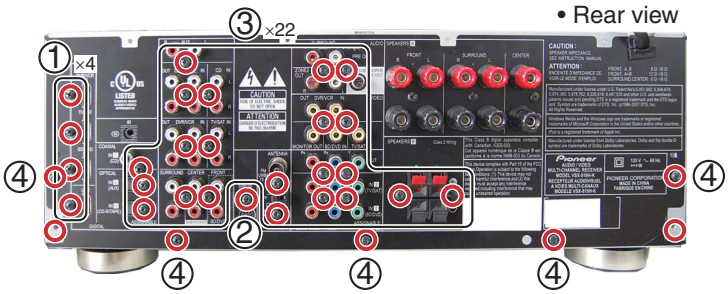

5. Remove the rear chassis.
6. Remove the P.C.B SUB Assy (DSP).

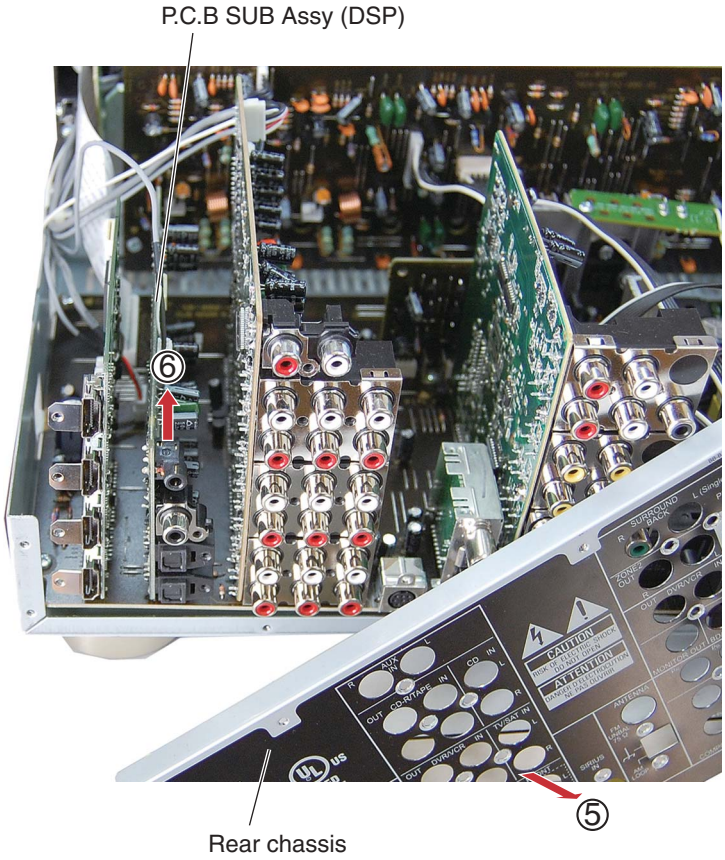

7. Disconnect the two connectors.

Note:
When reassembling after disassembling the product for repair, before connecting the power cord, make sure that the 2P wire from the CN206 of the P.C.B SUB Assy (DSP) is connected to the CP803 of the P.C.B TOTAL Assy (INPUT).

See **"2. Notes on Ground Points Connection".**

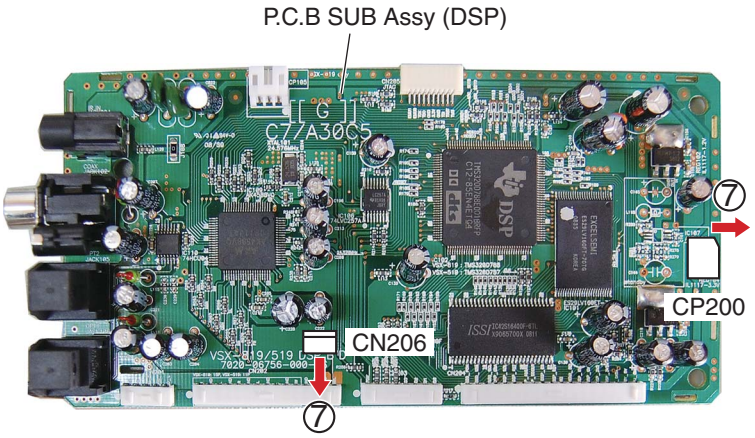

8. Reassembling the rear chassis.
9. Connect the board to board extension jig cable.

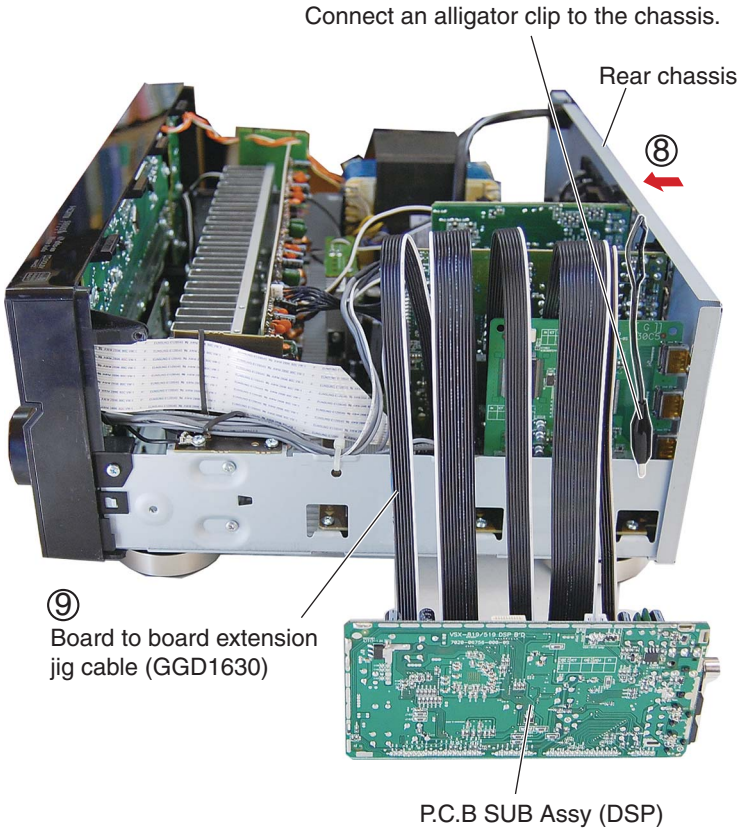

8. EACH SETTING AND ADJUSTMENT
8.1 IDLE CURRENT ADJUSTMENT

1. Idle Current Adjustment

Measurement Points	Adjustment Points	Procedure
TP201**FL** 3PIN : TEST POINT(+) TP201**FL** 1PIN : TEST POINT(-)	VR201**FL**	① Turn on the power. ② Perform aging for one minute. ③ Connect a digital voltmeter to the measurement point. ④ Turn the adjustment VR so that the voltage becomes in 2.0 mV ± 0.2 mV. (Condition : No signal and no load)
TP201**FR** 3PIN : TEST POINT(+) TP201**FR** 1PIN : TEST POINT(-)	VR201**FR**	
TP201**C** 3PIN : TEST POINT(+) TP201**C** 1PIN : TEST POINT(-)	VR201**C**	
TP201**SL** 3PIN : TEST POINT(+) TP201**SL** 1PIN : TEST POINT(-)	VR201**SL**	
TP201**SR** 3PIN : TEST POINT(+) TP201**SR** 1PIN : TEST POINT(-)	VR201**SR**	

• **Adjustment Point and Measurement Points**.... see fig1.

J P.C.B SUB ASSY (AMP)

SIDE A

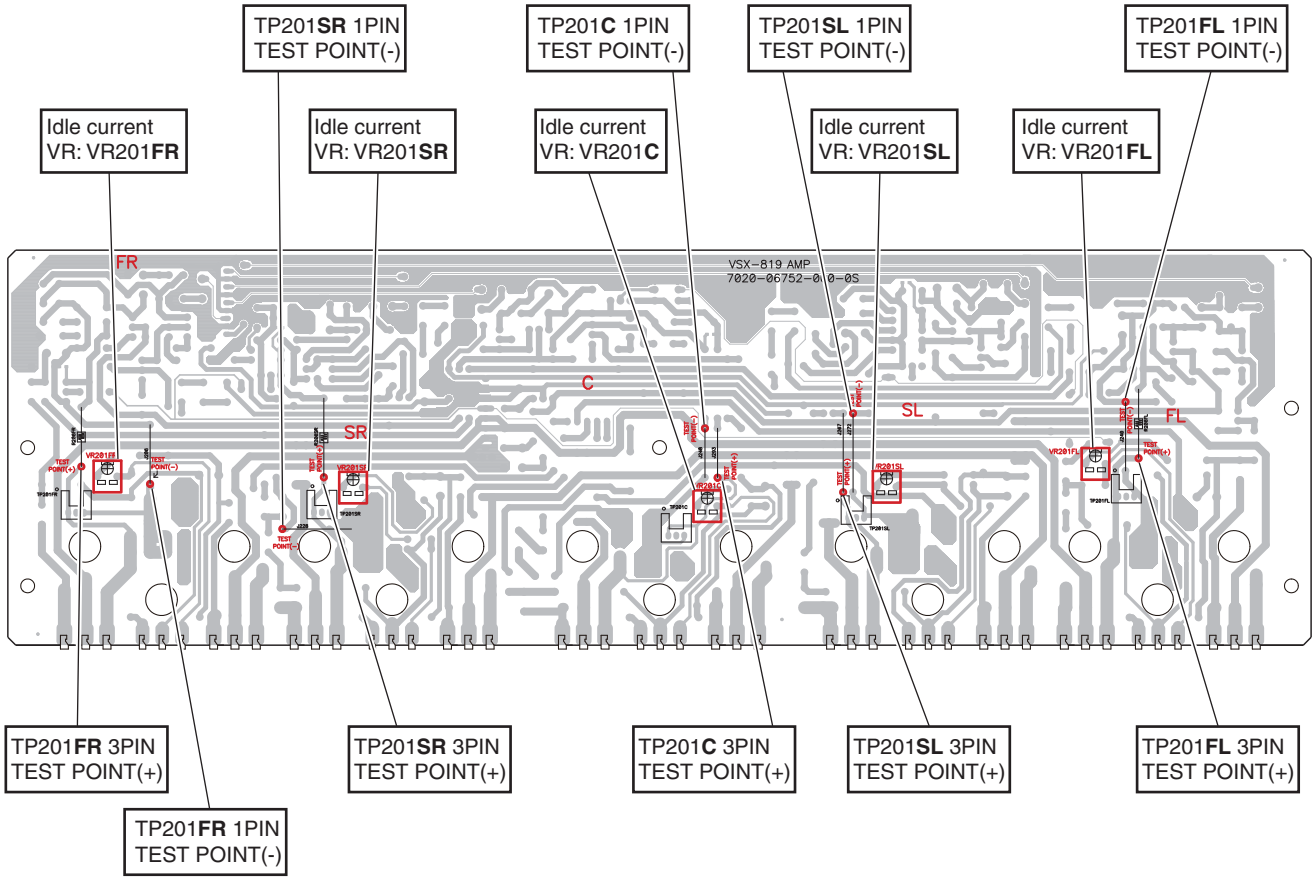

[fig 1.]

A

B

C

D

E

F

9. EXPLODED VIEWS AND PARTS LIST

NOTES: ● *Parts marked by "NSP" are generally unavailable because they are not in our Master Spare Parts List.*
● *The ⚠ mark found on some component parts indicates the importance of the safety factor of the part. Therefore, when replacing, be sure to use parts of identical designation.*
● *Screws adjacent to ▼ mark on product are used for disassembly.*
● *For the applying amount of lubricants or glue, follow the instructions in this manual. (In the case of no amount instructions, apply as you think it appropriate.)*

9.1 PACKING SECTION

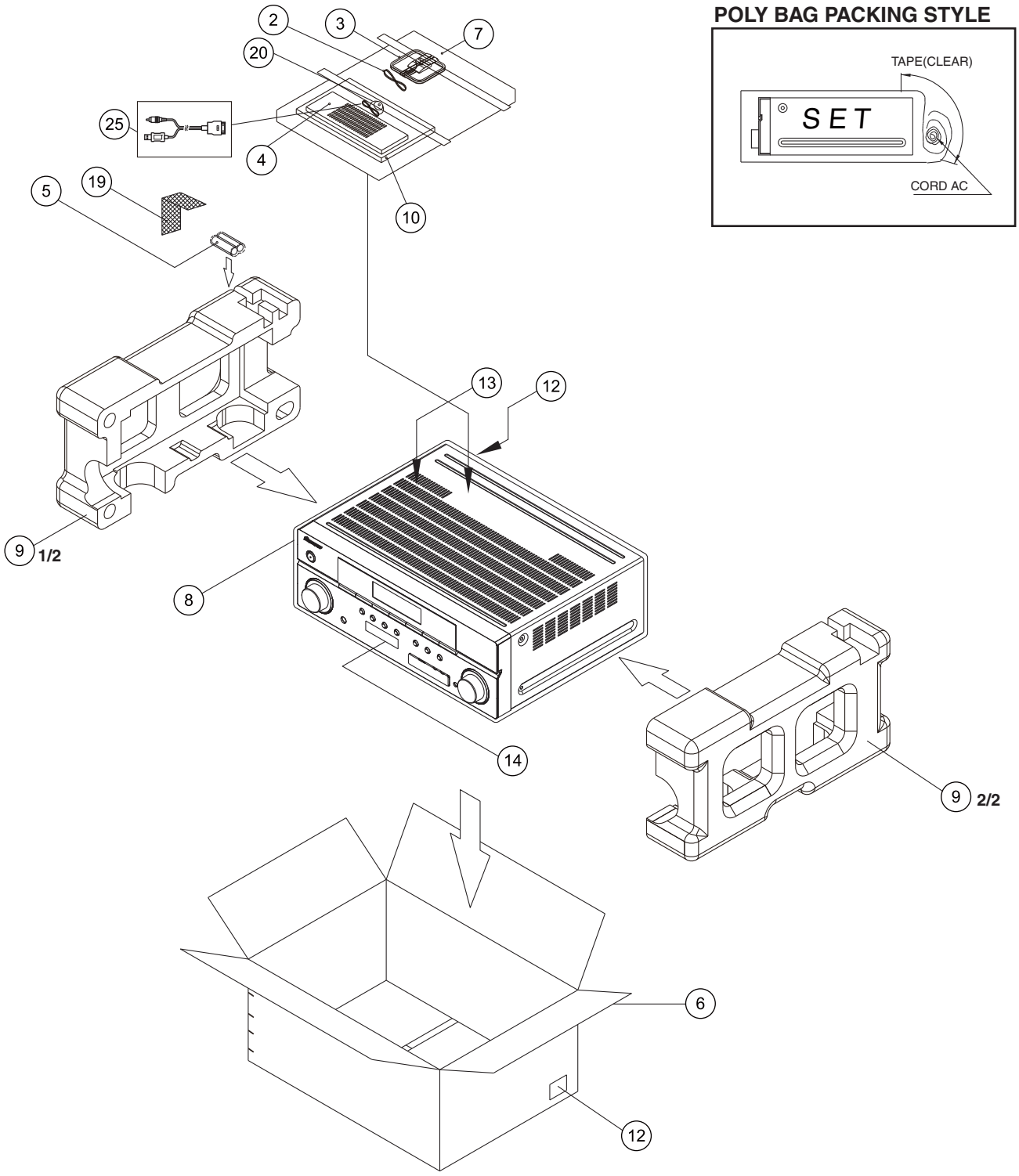

PACKING SECTION PARTS LIST

Mark	No.	Description	Part No.
	1	• • • • •	
	2	FM Wire Antenna	E605010070001-IL
	3	AM Loop Antenna	E601016000010-IL
	4	Remote Control	8300753100010-IL
NSP	5	Dry Cell Batteries (AAA size IEC R03)	G670001R50210-IL
	6	Box,Gift 819K_KU	6007211330020-IL
NSP	7	Poly Bag	• • • • •
	8	PE,Sheet	6327040059000-IL
	9	Cushion,Snow	6230212404000-IL
	10	Operating Instructions (En/Frca/Es)	5707000001851-IL
	11	• • • • •	
NSP	12	Label	VRW1629
	13	Label Trans	5507000003270-IL
NSP	14	Label Getter 819	5507000003580-IL
	15	• • • • •	
	16	• • • • •	
	17	• • • • •	
	18	• • • • •	
NSP	19	Tape	• • • • •
	20	Microphone (for Auto MCACC setup)	M040000300100-IL
	21	• • • • •	
	22	• • • • •	
	23	• • • • •	
	24	• • • • •	
	25	iPod Cable	L308102013010-IL

9.2 EXTERIOR SECTION

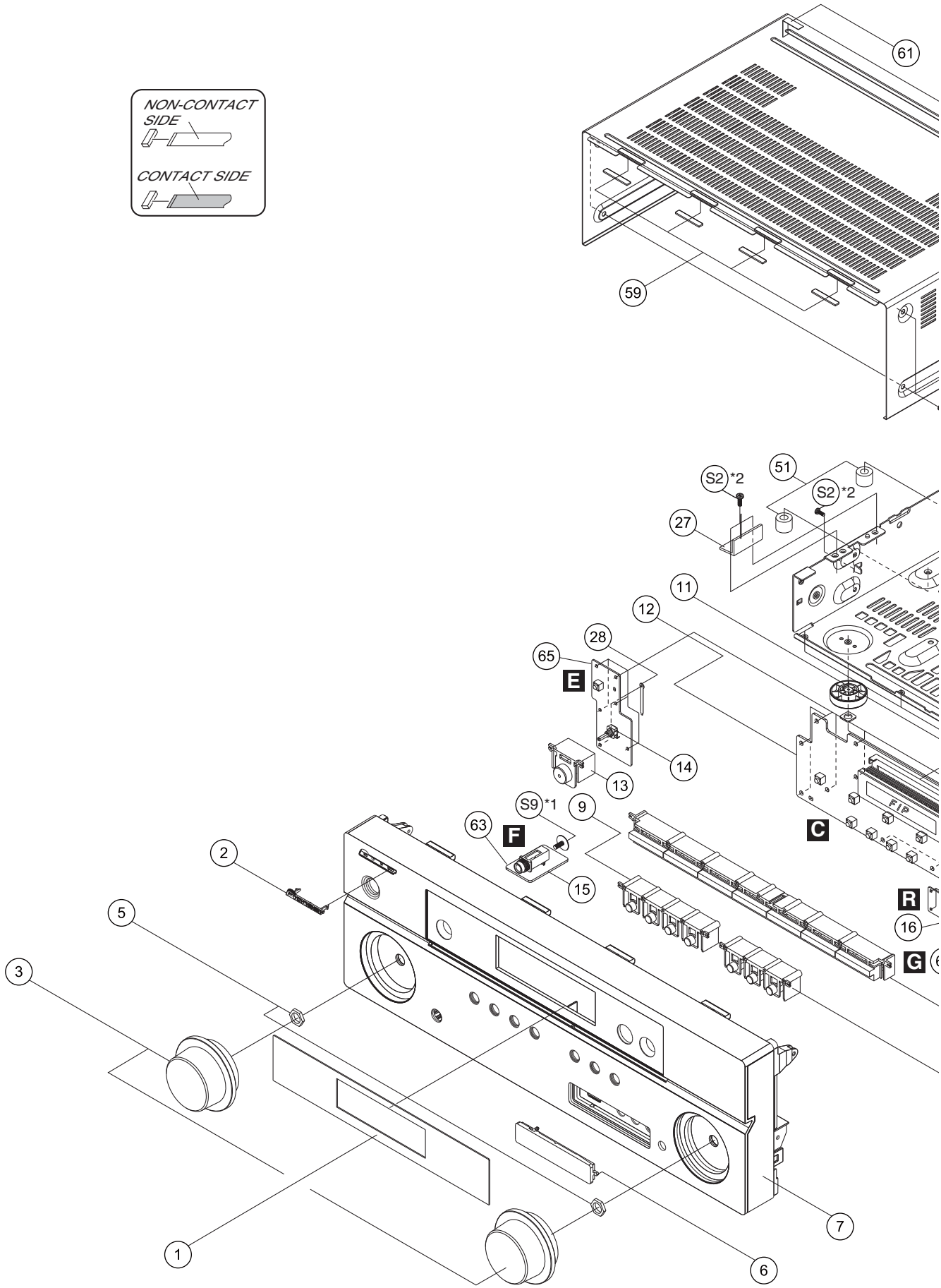

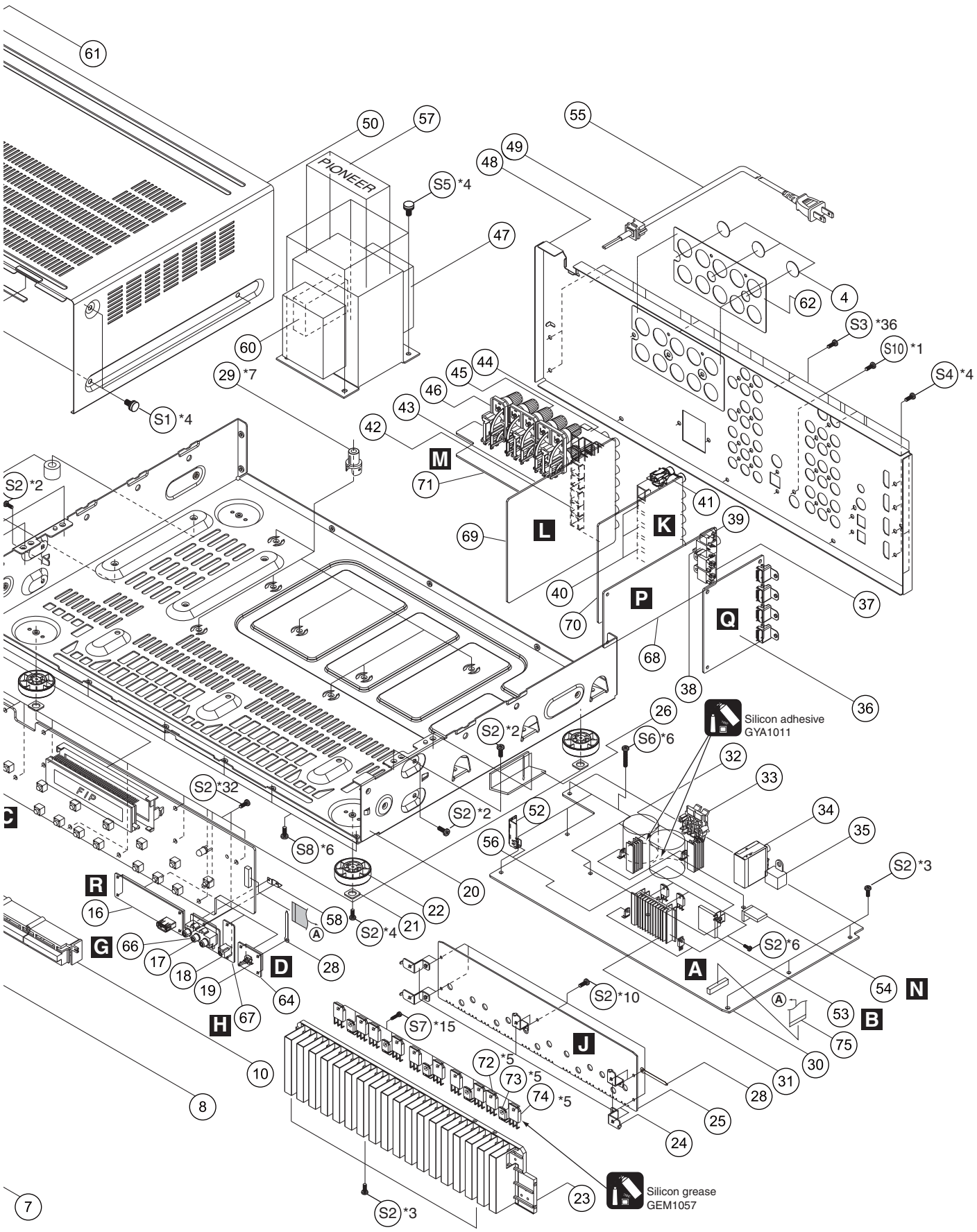
PIONEER
FIP
Silicon adhesive
GYA1011
Silicon grease
GEM1057

EXTERIOR SECTION PARTS LIST

Mark	No.	Description	Part No.
	1	Window	5077212673000-IL
	2	Pioneer Badge B	XAM3006
	3	Knob	5080211931100-IL
	4	Cushion	4050211745000-IL
NSP	5	Nut	• • • • •
	6	Cover	4317214401100-IL
	7	Panel	3067214171000-IL
	8	Button	5090213751100-IL
	9	Button	5090213761100-IL
	10	Button	5097213771100-IL
	11	Holder	432004078301A-IL
	12	P.C.B SUB ASSY (FRONT)	7028067511010-IL
	13	Button	5090213741100-IL
	14	SW,Encoder (S701)	G121123050020-IL
	15	Jack,D6.5 (JA701)	G402PJ619AG0Y-IL
	16	P.C.B SUB ASSY (USB)	7028067591010-IL
	17	TER,RCA 3Pin (JA704)	G60603W0192GD-IL
	18	Jack,D3.5 (JA702)	G401PJ354H40Y-IL
	19	SW,Encoder (S702)	G121123040010-IL
NSP	20	Chassis	3200212676000-IL
	21	Cushion	4050211605000-IL
	22	Foot	4007210391000-IL
NSP	23	Heat Sink	2120211378000-IL
	24	Bracket	4010056906010-IL
	25	P.C.B SUB ASSY (AMP)	7028067521010-IL
	26	P.C.B SUB ASSY (GUIDE PCB R)	7028067503010-IL
	27	P.C.B SUB ASSY (GUIDE PCB L)	7028067502010-IL
NSP	28	Clamp	• • • • •
NSP	29	Spacer	• • • • •
	30	P.C.B SUB ASSY (MAIN)	7028067501030-IL
	31	Heat Sink	2120210958010-IL
	32	Heat Sink	2120000818020-IL
NSP	33	TER Board Push 4P	. . . . .
	34	Tuner (JA101)	E903004100020-IL
	35	Jack,DIN (JA1011)	G403515397000-IL
	36	P.C.B SUB ASSY (HDMI-819)	7028067571010-IL
	37	OpticaL Receiver (JA105, JA106)	E100116500040-IL
	38	TER,RCA 1Pin (JA102)	G600107A0000Y-IL
	39	Jack,D3.5 (JA804)	G40130802000Y-IL
	40	TER,RCA 6Pin (JA802-JA804)	G603060056000-IL
	41	RCA Jack (JA801)	G601207AE020Y-IL
	42	TER,RCA 9Pin (JA1003)	G607902AD016Y-IL
	43	TER,RCA (JA1002)	G608610D0209Y-IL
	44	TER,RCA (JA1001)	G608610D0210Y-IL
	45	TER,Board Screw 8P (JA401)	G614108V1010M-IL
	46	TER,Board Screw 2P (JA402)	G611201A0200Y-IL
⚠	47	Power Trans	8200960610470-IL
	48	Chassis	3207212696000-IL
	49	Stopper	4380040162010-IL
	50	Cabinet	3007211276010-IL
	51	Cushion	4050211205000-IL
	52	P.C.B SUB ASSY (H/P GUIDE)	7028067506010-IL
	53	P.C.B SUB ASSY (P/T)	7028067505010-IL
	54	P.C.B SUB ASSY (CNT)	7028067504010-IL
⚠	55	Cord Assy	L068125101710-IL
	56	Bracket	4010210196000-IL
	57	Label Trans	5507000003270-IL
	58	Shield	3070210516000-IL
	59	Sheet	1210210235000-IL
	60	Cushion	4050211365000-IL
	61	Cushion	4050211385000-IL
	62	Sheet	1210210762000-IL
	63	P.C.B SUB ASSY (HEADPHONE)	7028067512010-IL
	64	P.C.B SUB ASSY (VOLUME)	7028067513010-IL
	65	P.C.B SUB ASSY (FUNCTION)	7028067514010-IL
	66	P.C.B SUB ASSY (F-VIDEO)	7028067515010-IL
	67	P.C.B SUB ASSY (MIC)	7028067516010-IL
	68	P.C.B SUB ASSY (DSP)	7028067561010-IL
	69	P.C.B SUB ASSY (VIDEO-819)	7028067541020-IL
	70	P.C.B SUB ASSY (INPUT-819)	7028067531030-IL
	71	P.C.B SUB ASSY (SPEAKER-819)	7028067601020-IL
⚠	72	Transistor (Q2071-Q2075)	J5011560Y0000-IL
⚠	73	SEMI,TR/GE NPN 2SC (Q2051-Q2055)	J502396400010-IL
⚠	74	Transistor (Q2011-Q2015)	J5032390Y0000-IL
	75	Cable,Flat Card 1.25	N712232533810-IL
	S1	Screw	BBT40P080FTB
	S2	Screw	BBZ30P080FTC
	S3	Screw	BBT30P100FTB
	S4	Screw,Tap Tite	B020930083B10-IL
	S5	Screw	B028940101B10-IL
	S6	Screw	BBZ30P180FTC
	S7	Screw Tapping Assy	B018230141H11-IL
	S8	Screw	BBZ30P080FTB
	S9	Screw	1500001456010-IL
	S10	Screw	BMZ30P100FTB

A

B

C

D

E

F

10. SCHEMATIC DIAGRAM

10.1 P.C.B SUB ASSY (MAIN) and P.C.B SUB ASSY (P/T)

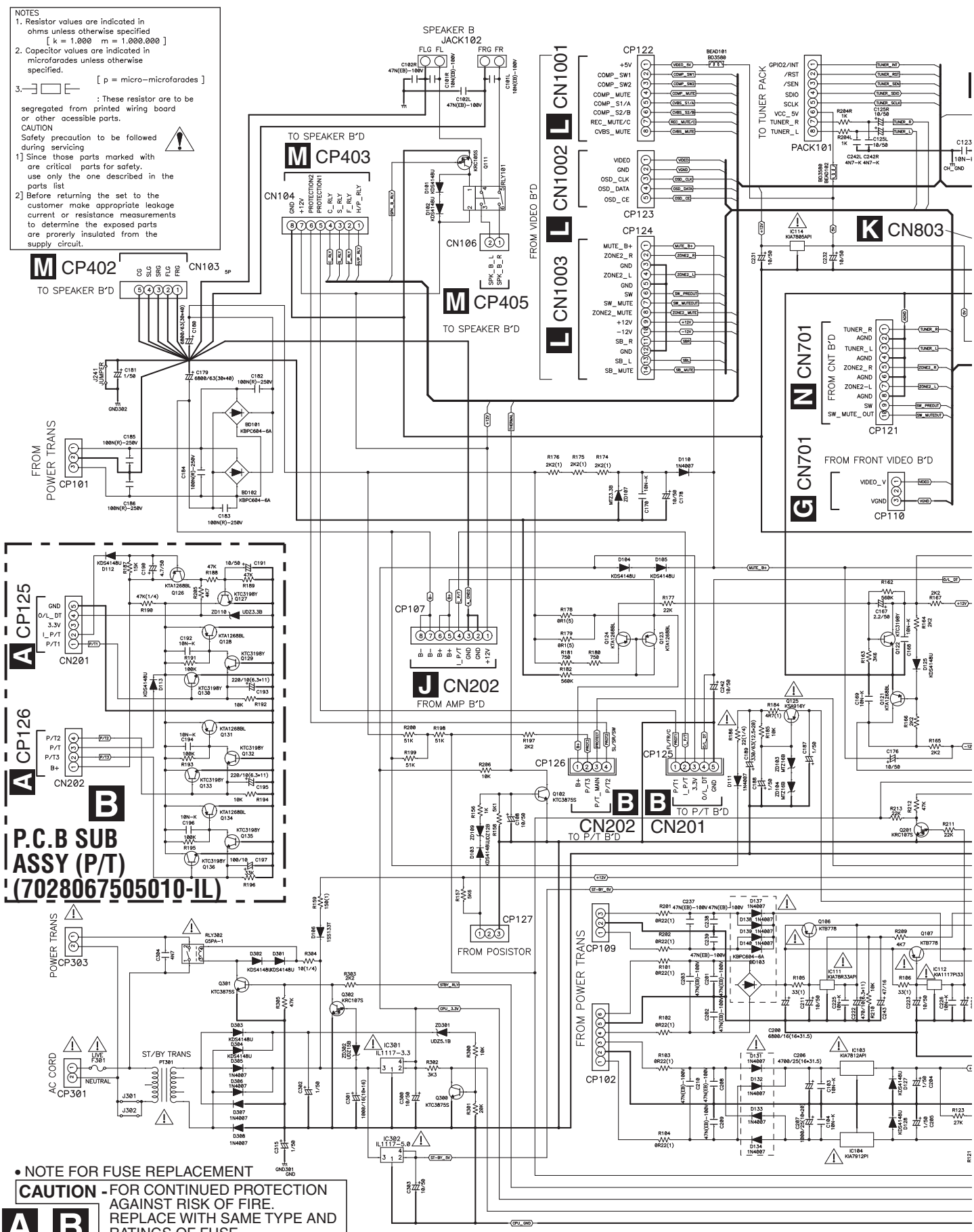

- When ordering service parts, be sure to refer to "EXPLODED VIEWS and PARTS LIST" or "PCB PARTS LIST".
- The ⚠ mark found on some component parts indicates the importance of the safety factor of the part. Therefore, when replacing, be sure to use parts of identical designation.
- : The power supply is shown with the marked box.

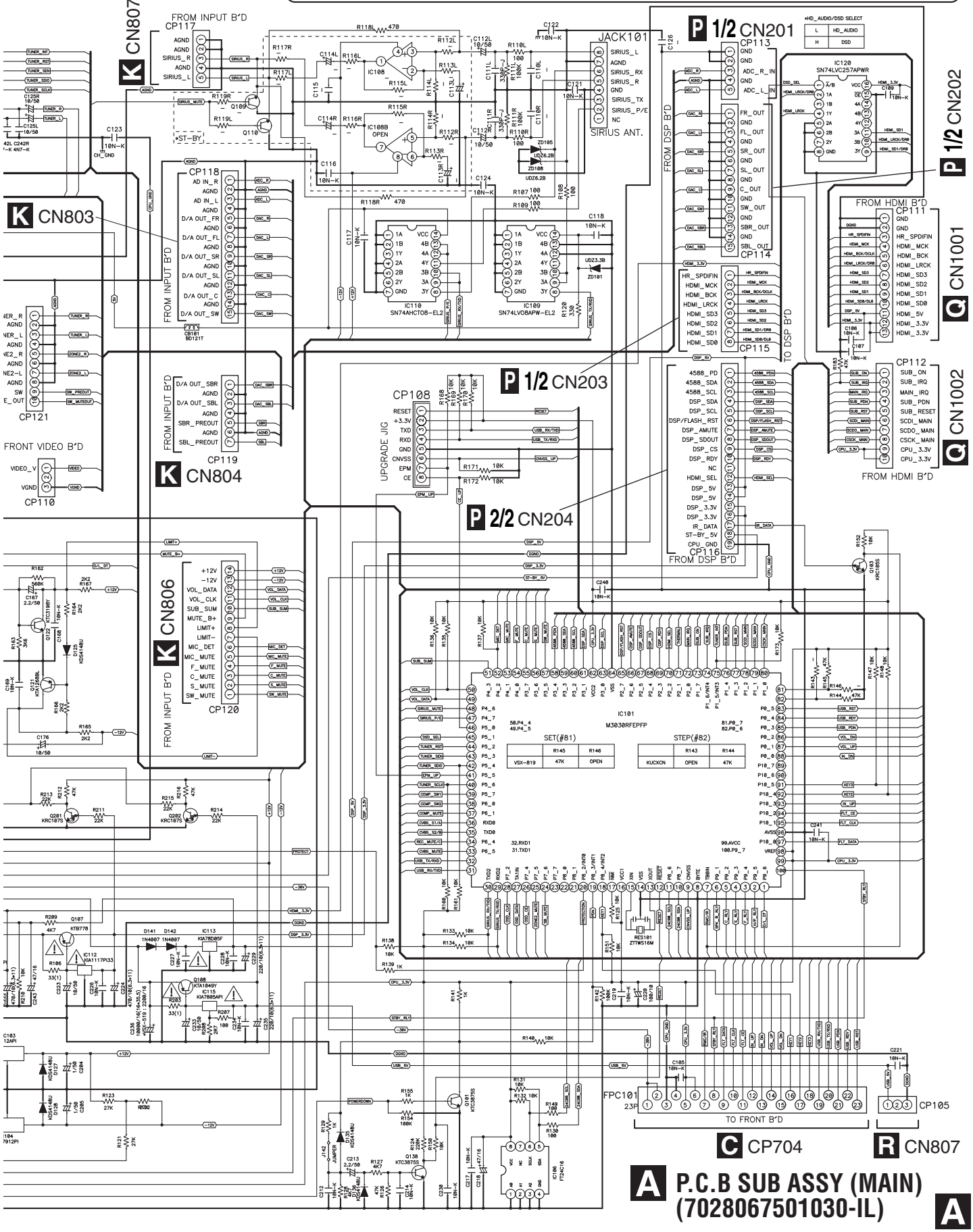

A P.C.B SUB ASSY (MAIN)
(7028067501030-IL)

10.2 P.C.B SUB ASSYS (FRONT), (VOLUME), (FUNCTION), (HEADPHONE), (F-VIDEO) and (MIC)

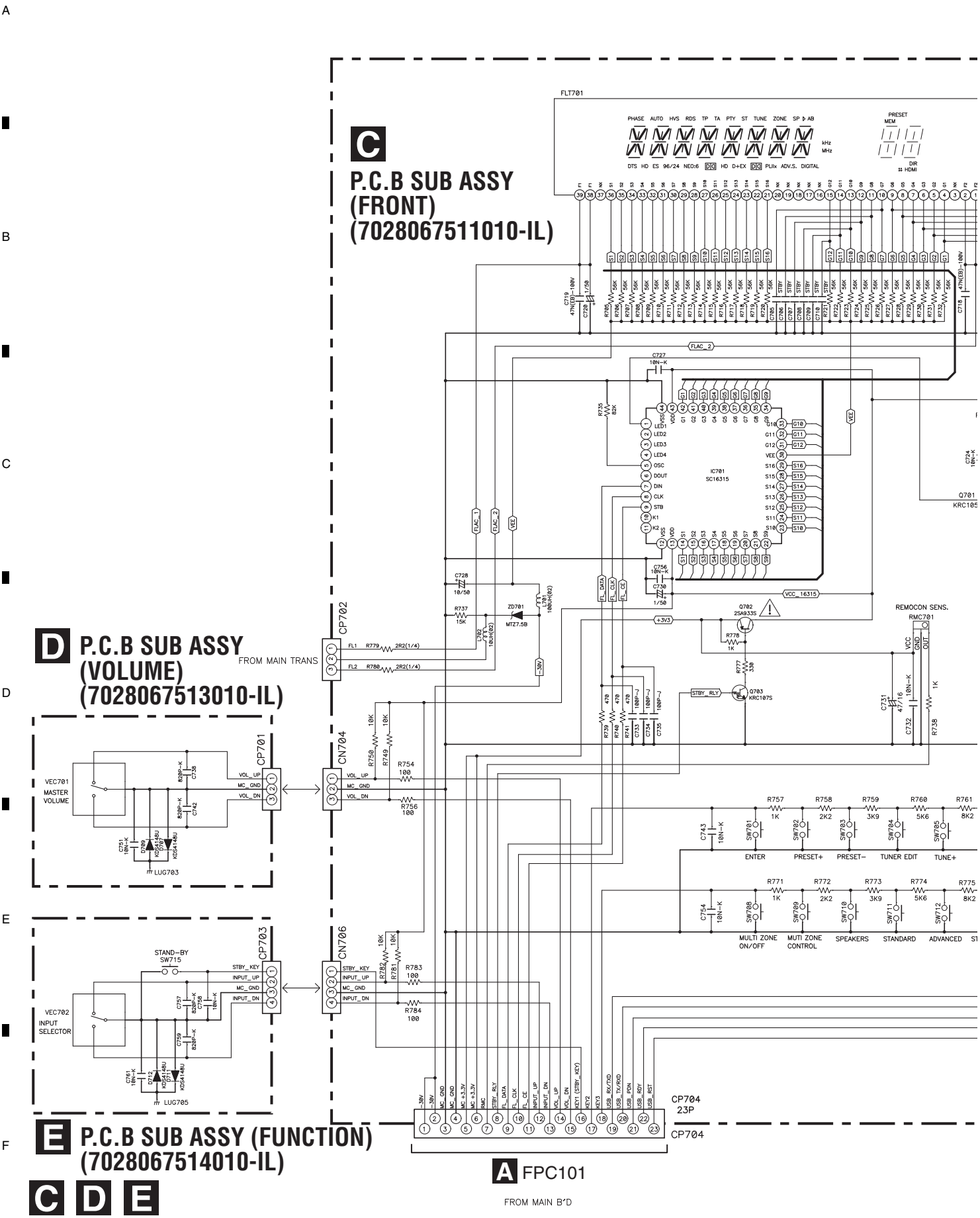

G P.C.B SUB ASSY (F-VIDEO) (7028067515010-IL)

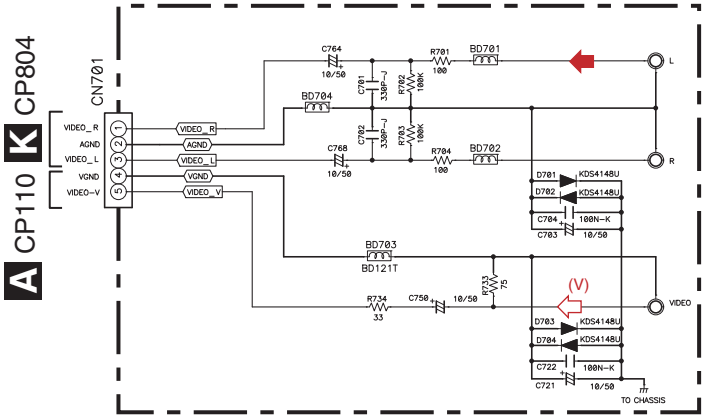

F P.C.B SUB ASSY (HEADPHONE) (7028067512010-IL)

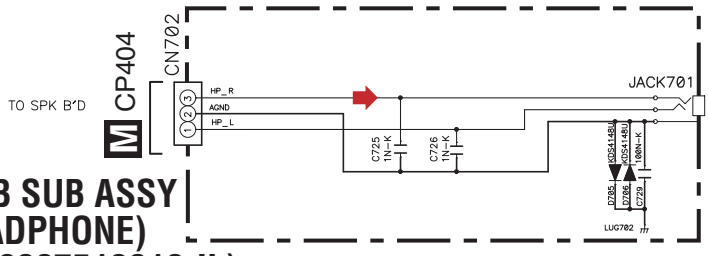

H P.C.B SUB ASSY (MIC) (7028067516010-IL)

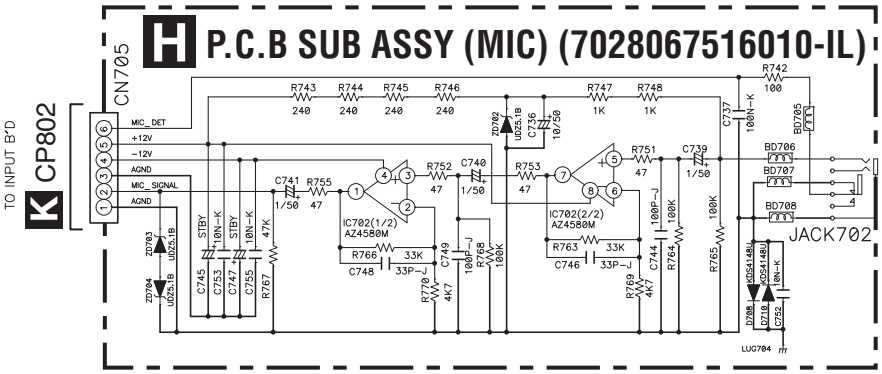

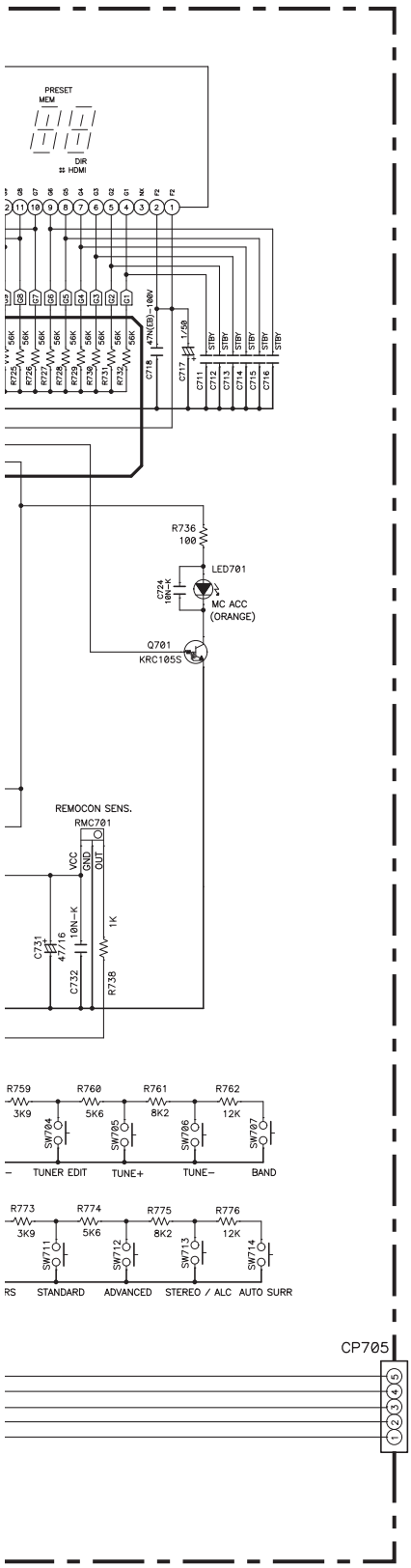

(V) : Video Signal Route

: Audio Signal Route (L ch)

C F G H

10.3 P.C.B SUB ASSY (AMP)

J P.C.B SUB ASSY (AMP) (7028067521010-IL)

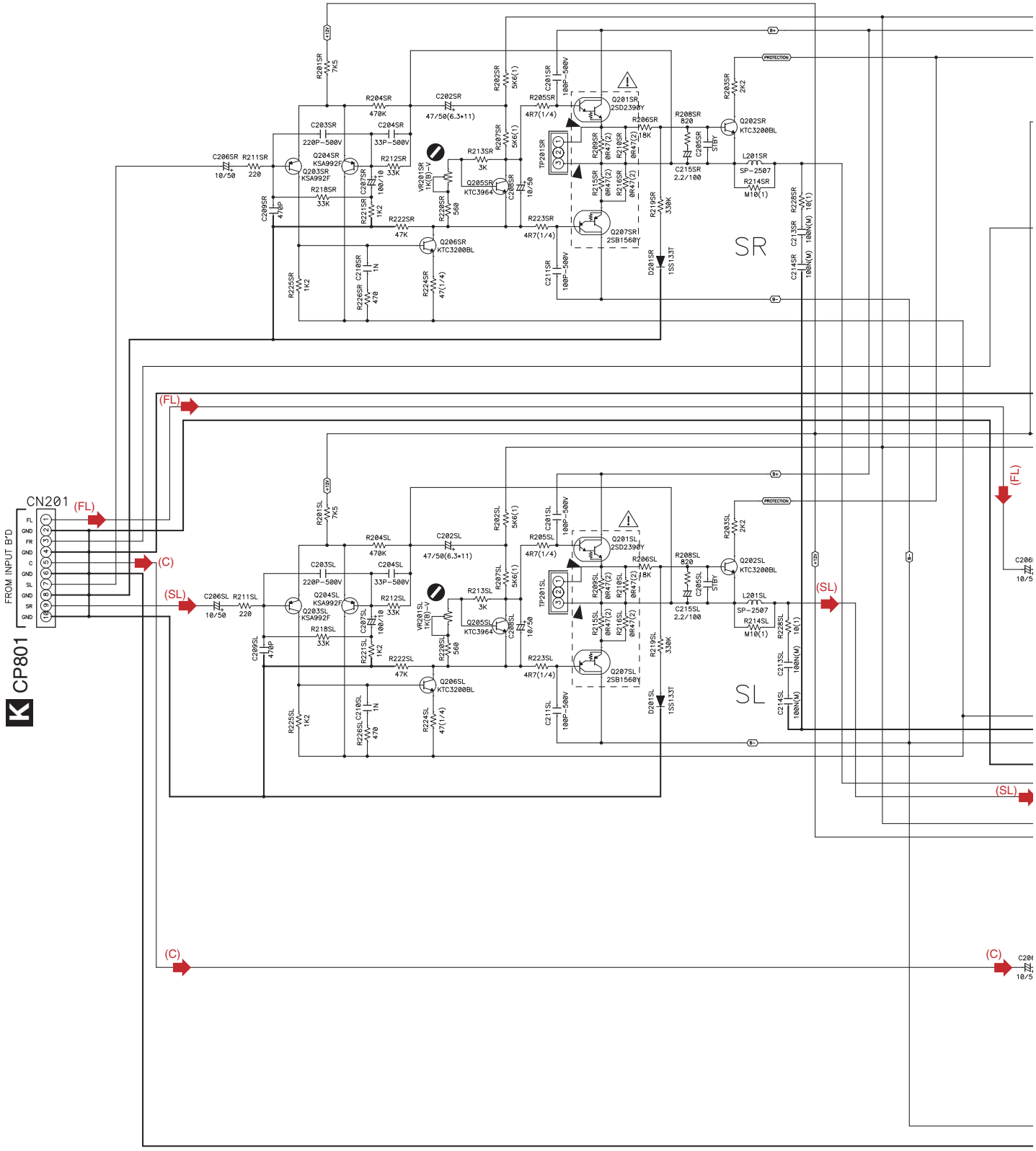

(FL) : Audio Signal Route (Front L ch)

(SL) : Audio Signal Route (Surround L ch)

(C) : Audio Signal Route (Center ch)

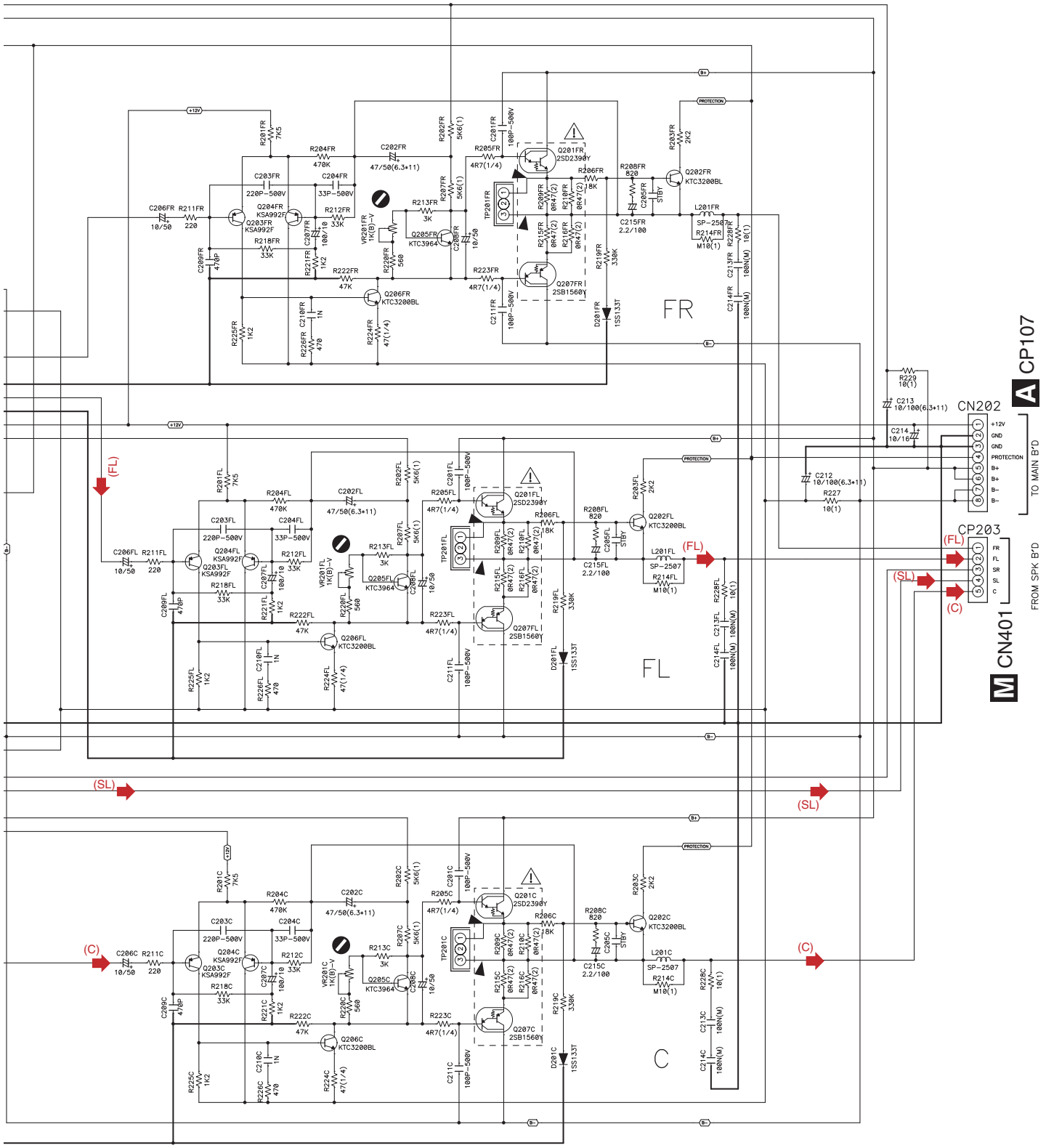
FR
FL
C
CN202
CP107
TO MAIN B'D
CP203
CN401
FROM SPK B'D
(FL)
(SL)
(C)
PROTECTION
+12V
B+
B-

10.4 P.C.B SUB ASSY (INPUT-819)

K P.C.B SUB ASSY (INPUT-819) (7028067531030-IL)

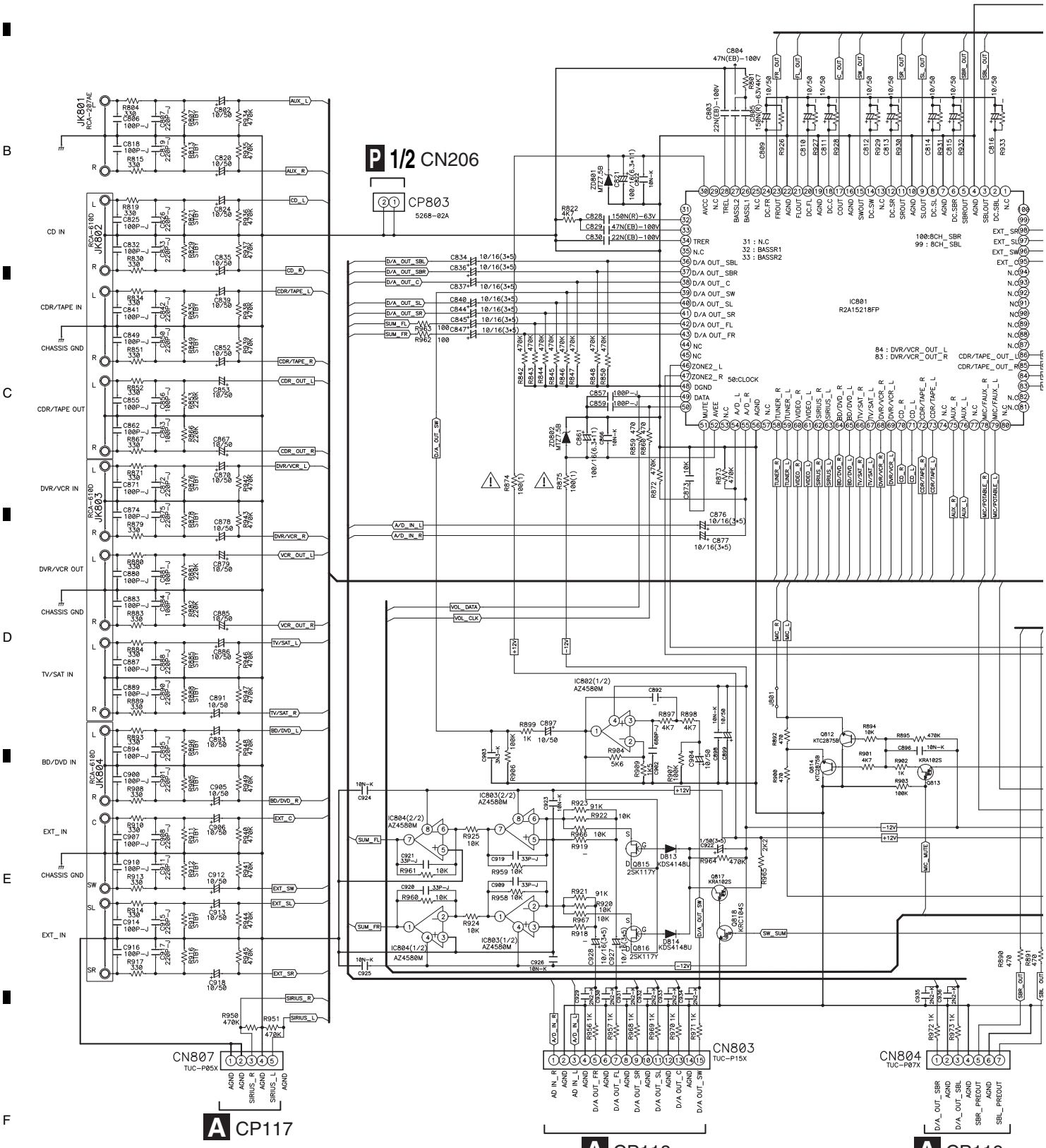

(FL) : Audio Signal Route (Front L ch)
(SL) : Audio Signal Route (Surround L ch)
(C) : Audio Signal Route (Center ch)

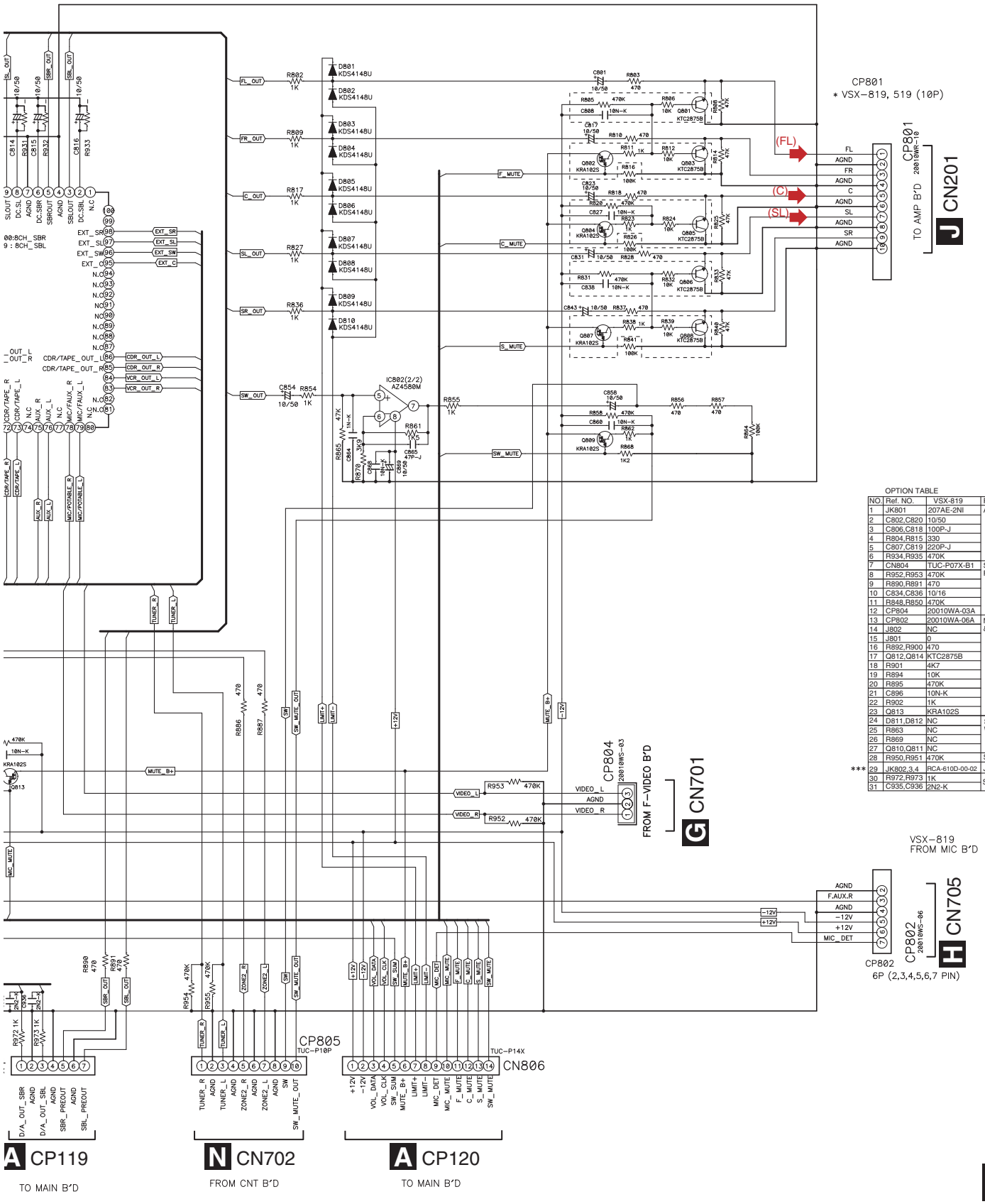

OPTION TABLE

NO.	Ref. NO.	VSX-819	REMARK
1	JK801	207AE-2NI	AUX Input
2	C802,C820	10/50	
3	C806,C818	100P-J	
4	R804,R815	330	
5	C807,C819	220P-J	
6	R934,R935	470K	
7	CN804	TUC-P07X-B1	SB CH. & F. VIDEO
8	R952,R953	470K	
9	R890,R891	470	
10	C834,C836	10/16	
11	R848,R850	470K	
12	CP804	20010WA-03A	
13	CP802	20010WA-06A	MCACC & F.AUX
14	J802	NC	
15	J801	0	
16	R892,R900	470	
17	Q812,Q814	KTC2875B	
18	R901	4K7	
19	R894	10K	
20	R895	470K	
21	C896	10N-K	
22	R902	1K	
23	Q813	KRA102S	
24	D811,D812	NC	SUB WOOFER
25	R863	NC	
26	R869	NC	
27	Q810,Q811	NC	
28	R950,R951	470K	SIRIUS
*** 29	JK802,3,4	RCA-610D-00-02	JACK***
30	R972,R973	1K	SB CH
31	C935,C936	2N2-K	

10.5 P.C.B SUB ASSY (VIDEO-819)

L P.C.B SUB ASSY (VIDEO-819) (7028067541020-IL)

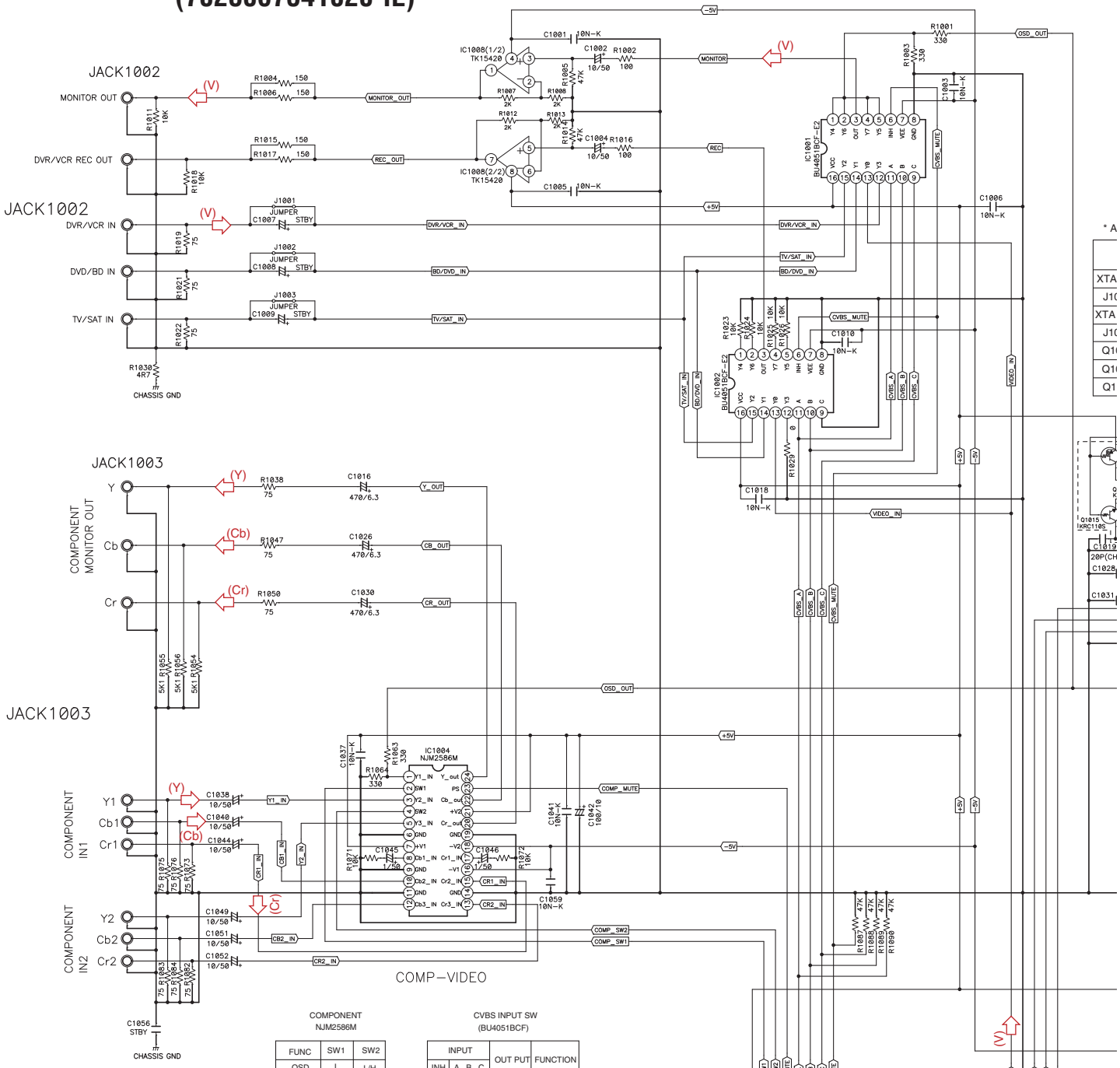

COMPONENT NJM2586M

FUNC	SW1	SW2
OSD	L	L/H
IN1	H	L
IN2	H	H

CVBS INPUT SW (BU4051BCF)

INPUT				OUT PUT	FUNCTION
INH	A	B	C		
H	X	X	X	X	X
L	L	L	L	Y0	VIDEO
L	H	L	L	Y1	BD/DVD
L	L	H	L	Y2	TV/SAT
L	H	H	L	Y3	DVR/VCR
L	L	L	H	Y4	OSD
L	H	L	H	Y5	OSD
L	L	H	H	Y6	OSD
L	H	H	H	Y7	OSD

(V): Video Signal Route

(Y): Video Signal Route (Component Y ch)

(Cb): Video Signal Route (Component Cb ch)

(Cr): Video Signal Route (Component Cr ch)

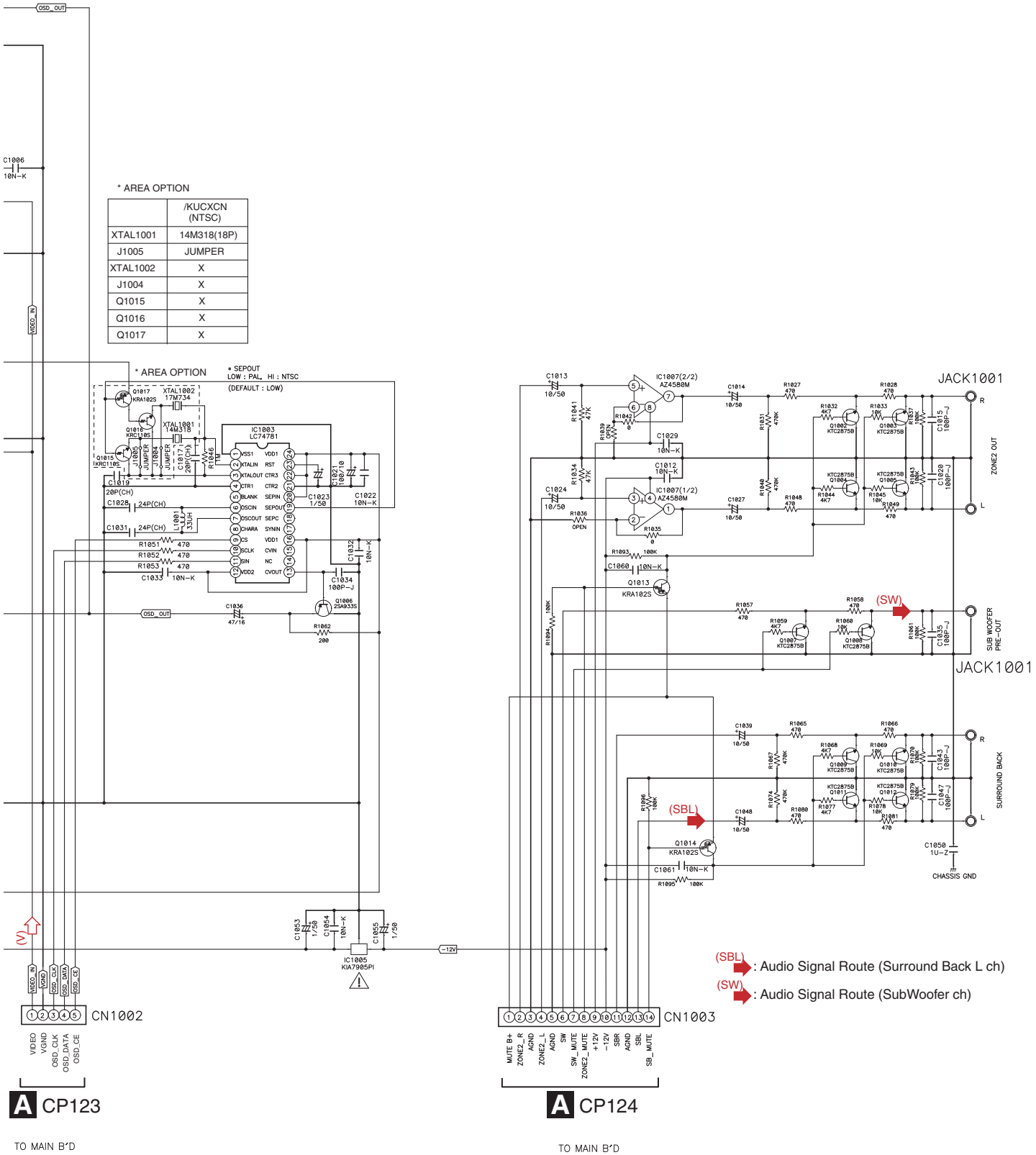
* AREA OPTION
/KUCXCN (NTSC)
XTAL1001 14M318(18P)
J1005 JUMPER
XTAL1002 X
J1004 X
Q1015 X
Q1016 X
Q1017 X
* AREA OPTION
* SEPOUT
LOW : PAL, HI : NTSC
(DEFAULT : LOW)
IC1003 LC74781
IC1007(2/2) AZ4580M
IC1007(1/2) AZ4580M
JACK1001
ZONE2 OUT
SUB WOOFER PRE-OUT
SURROUND BACK
CHASSIS GND
(SW)
(SBL)
IC1005 KIA7905PI
CN1002
CN1003
VIDEO
VGND
OSD_CLK
OSD_DATA
OSD_CE
MUTE B+
ZONE2_R
AGND
ZONE2_L
AGND
SW
SW_MUTE
ZONE2_MUTE
+12V
-12V
SBR
AGND
SBL
SB_MUTE
CP123
TO MAIN B'D
CP124
TO MAIN B'D
(SBL) : Audio Signal Route (Surround Back L ch)
(SW) : Audio Signal Route (SubWoofer ch)

10.6 P.C.B SUB ASSY (SPEAKER-819) and P.C.B SUB ASSY (CNT)

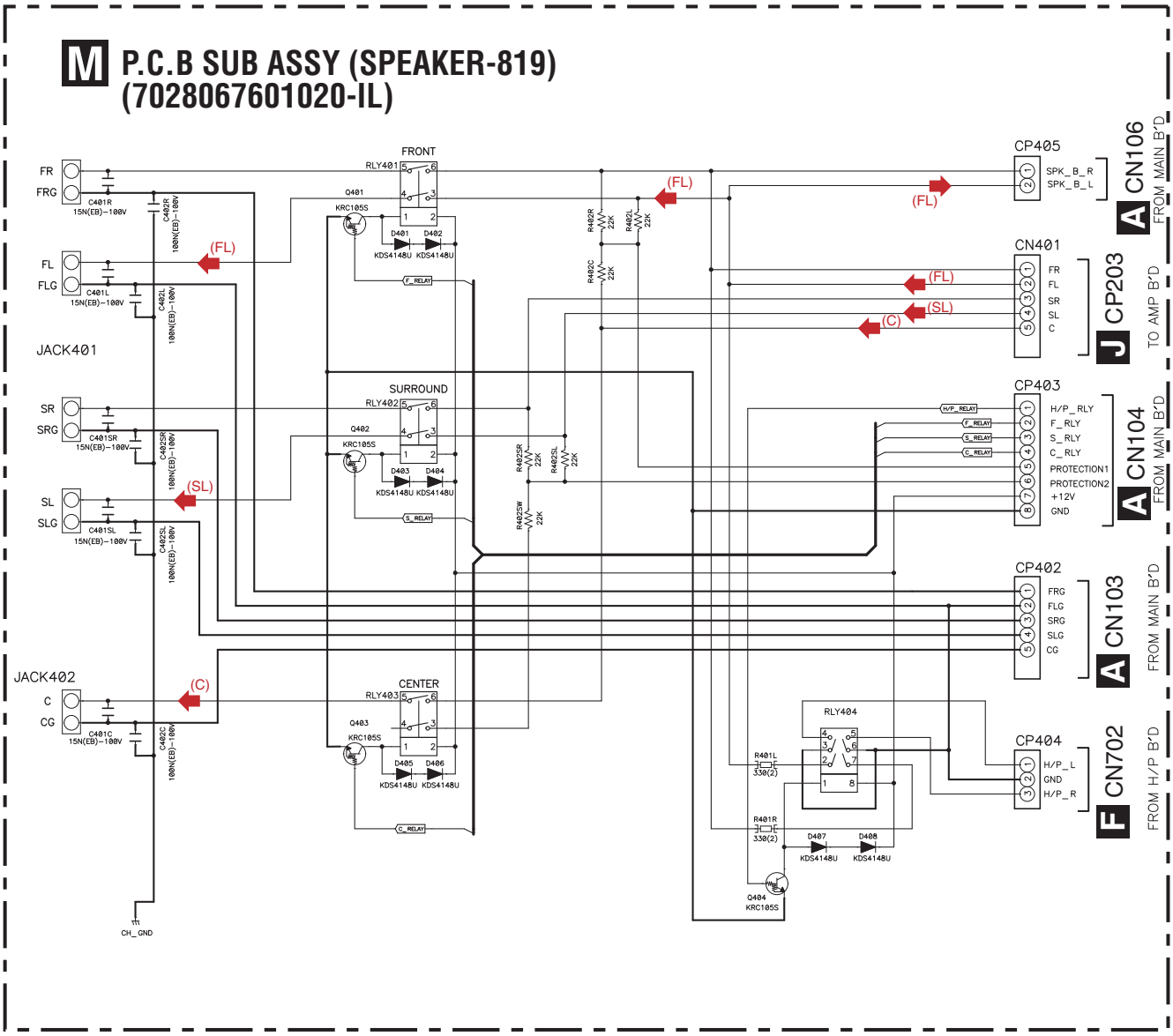

(FL) : Audio Signal Route (Front L ch)

(SL) : Audio Signal Route (Surround L ch)

(C) : Audio Signal Route (Center ch)

N P.C.B SUB ASSY (CNT) (7028067504010-IL)

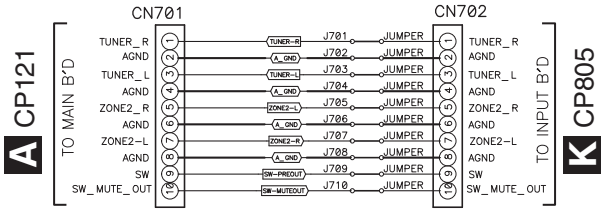

NOTES
1. Resistor values are indicated in ohms unless otherwise specified
[k = 1.000 m = 1.000.000]
2. Capacitor values are indicated in microfarades unless otherwise specified.
[p = micro-microfarades]
3. : These resistor are to be segregated from printed wiring board or other acessible parts.

CAUTION
Safety precaution to be followed during servicing
1] Since those parts marked with are critical parts for safety. use only the one described in the parts list
2] Before returning the set to the customer make appropriate leakage current or resistance measurements to determine the exposed parts are prorerly insulated from the supply circuit.

10.7 P.C.B SUB ASSY (DSP) (1/2)

P 1/2 P.C.B SUB ASSY (DSP) (7028067561010-IL)

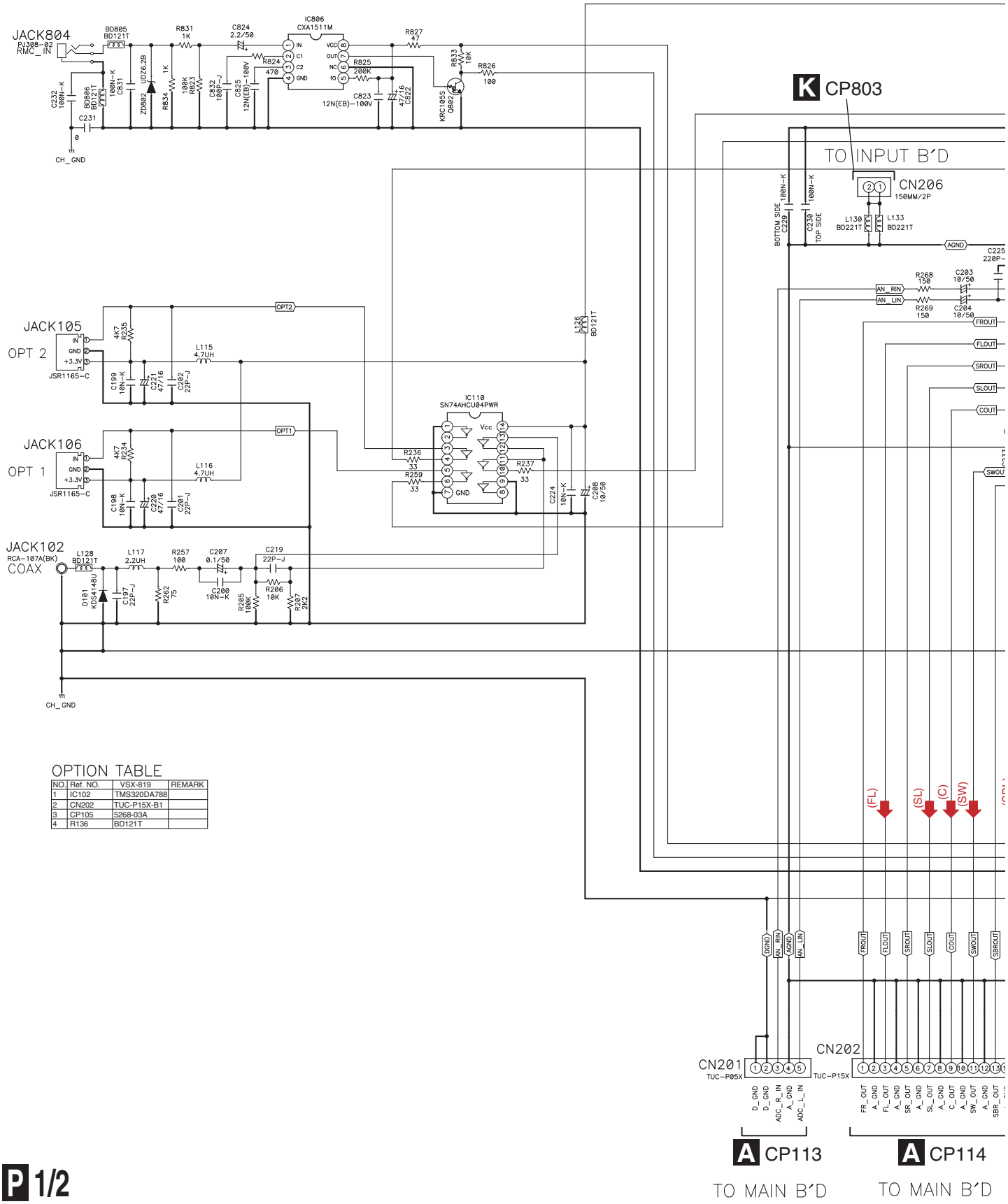

OPTION TABLE

NO.	Ref. NO.	VSX-819	REMARK
1	IC102	TMS320DA788	
2	CN202	TUC-P15X-B1	
3	CP105	5268-03A	
4	R136	BD121T	

P 1/2

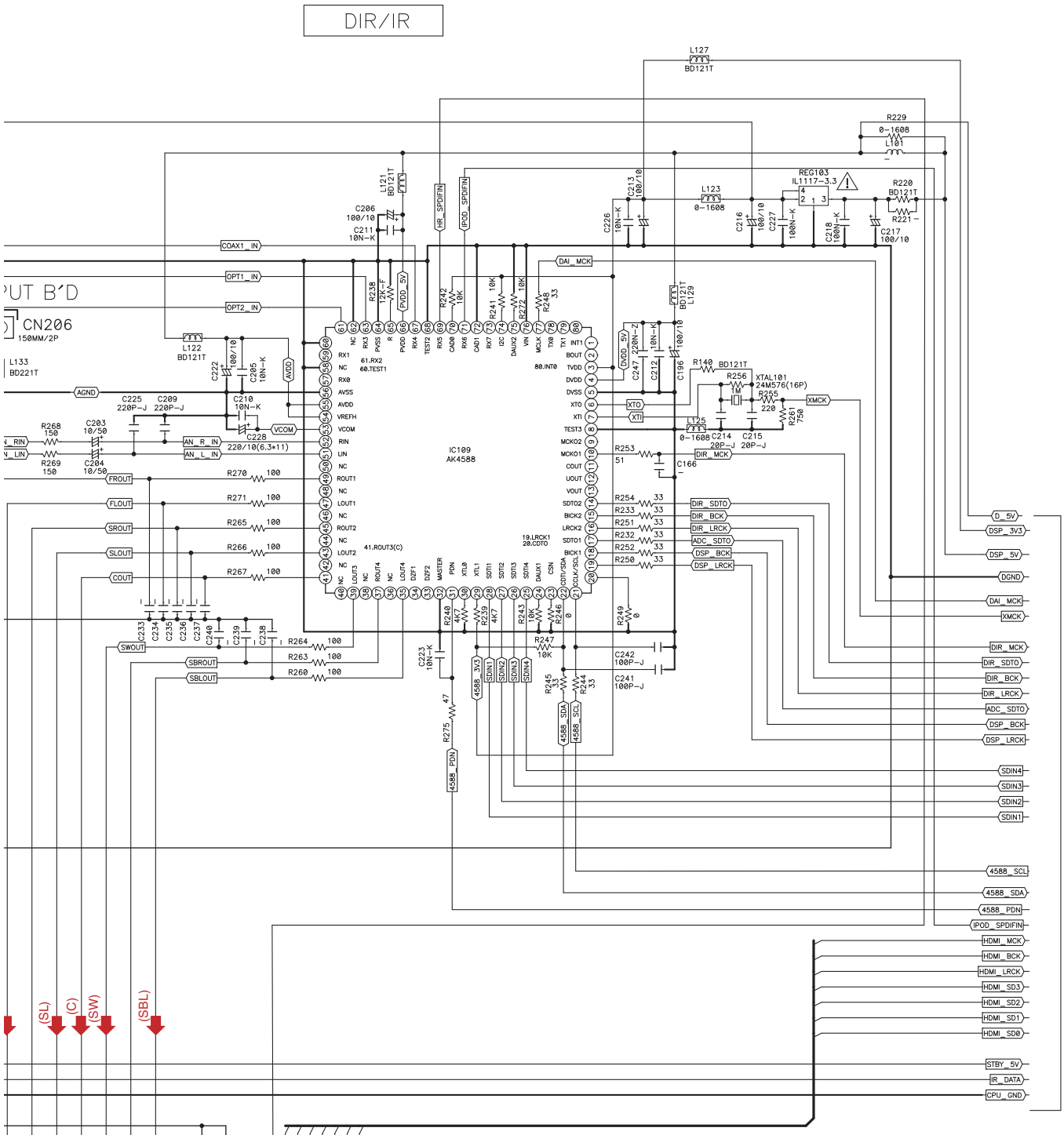

(FL) : Audio Signal Route (Front L ch)
(SL) : Audio Signal Route (Surround L ch)
(C) : Audio Signal Route (Center ch)
(SW) : Audio Signal Route (SubWoofer ch)
(SBL) : Audio Signal Route (Surround Back L ch)

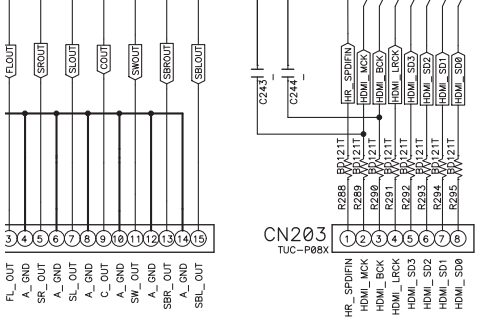

10.8 P.C.B SUB ASSY (DSP) (2/2)

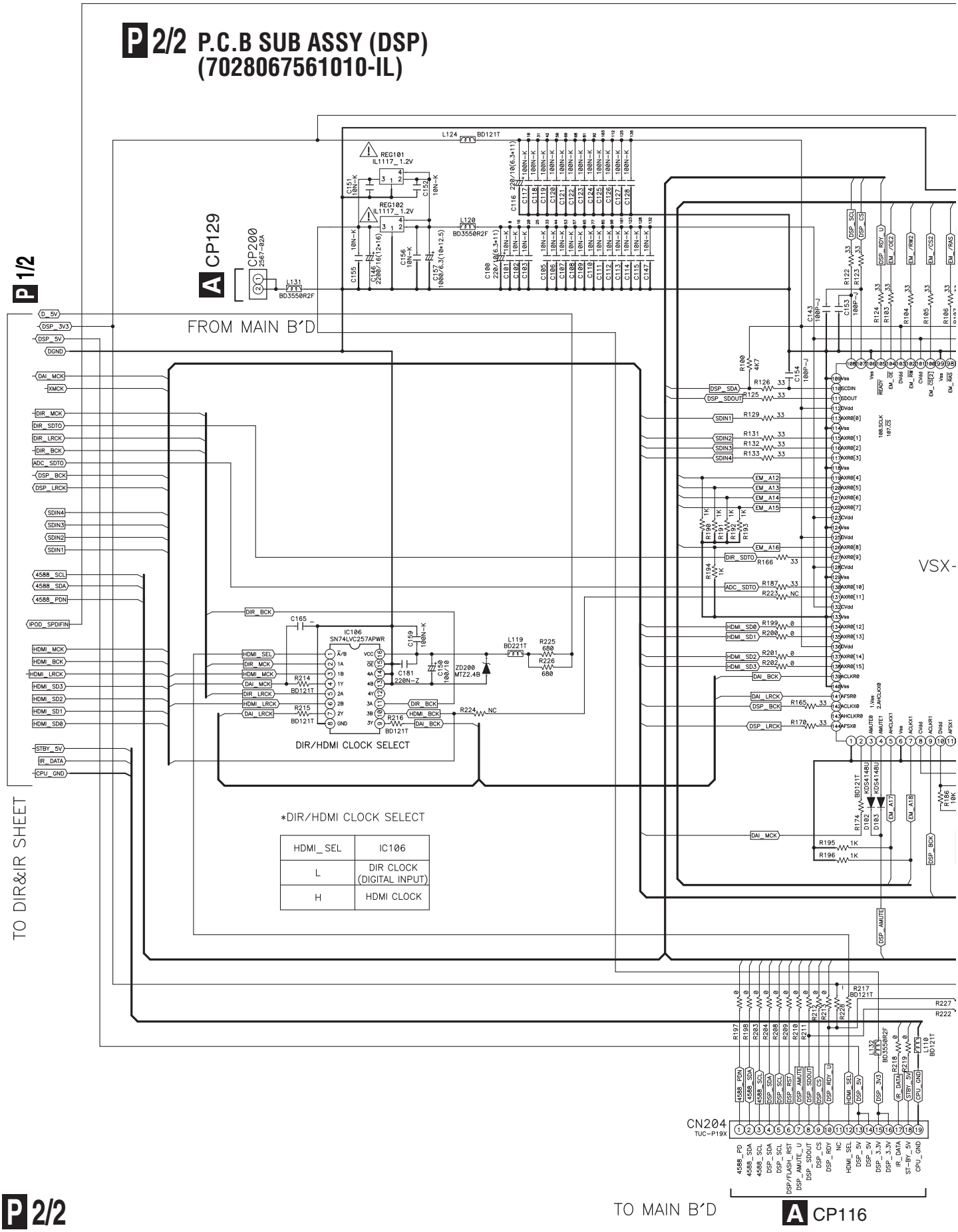

*DIR/HDMI CLOCK SELECT

HDMI_SEL	IC106
L	DIR CLOCK (DIGITAL INPUT)
H	HDMI CLOCK

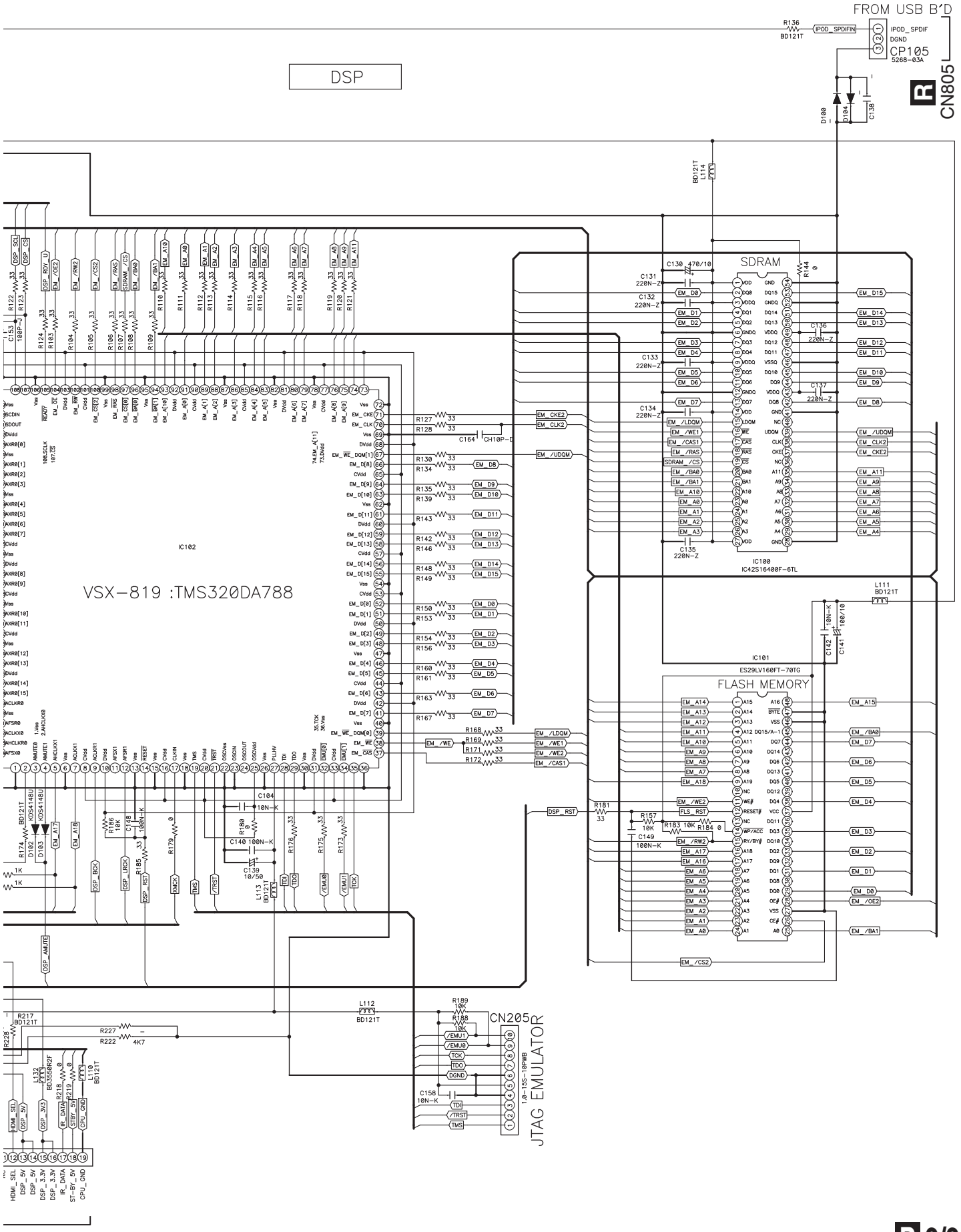
FROM USB B'D
CP105
CN805
DSP
SDRAM
IC100
IC102
VSX-819 :TMS320DA788
IC101
FLASH MEMORY
CN205
JTAG EMULATOR

10.9 P.C.B SUB ASSY (USB)

R P.C.B SUB ASSY (USB) (7028067591010-IL)

P 2/2 CP105

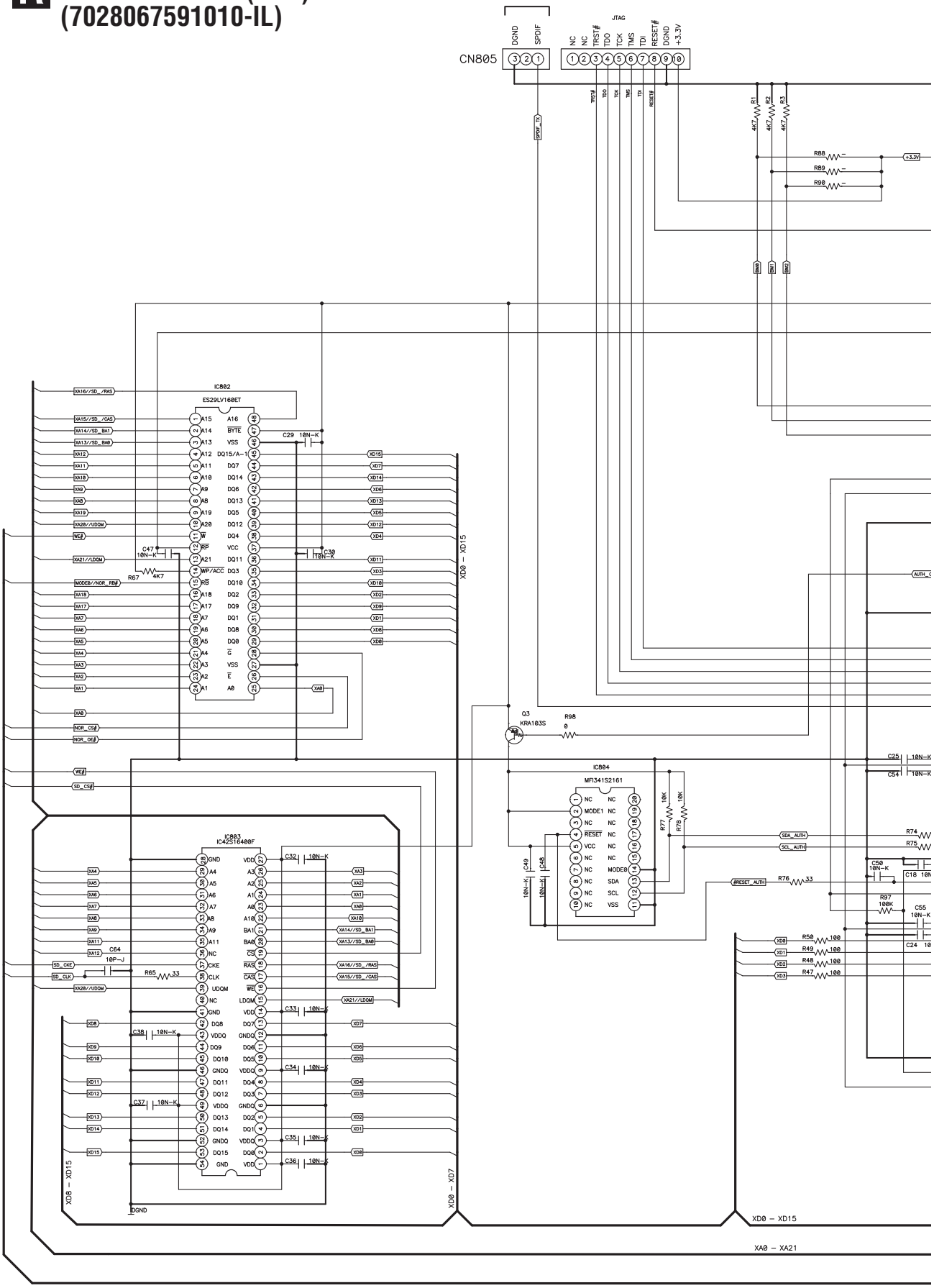

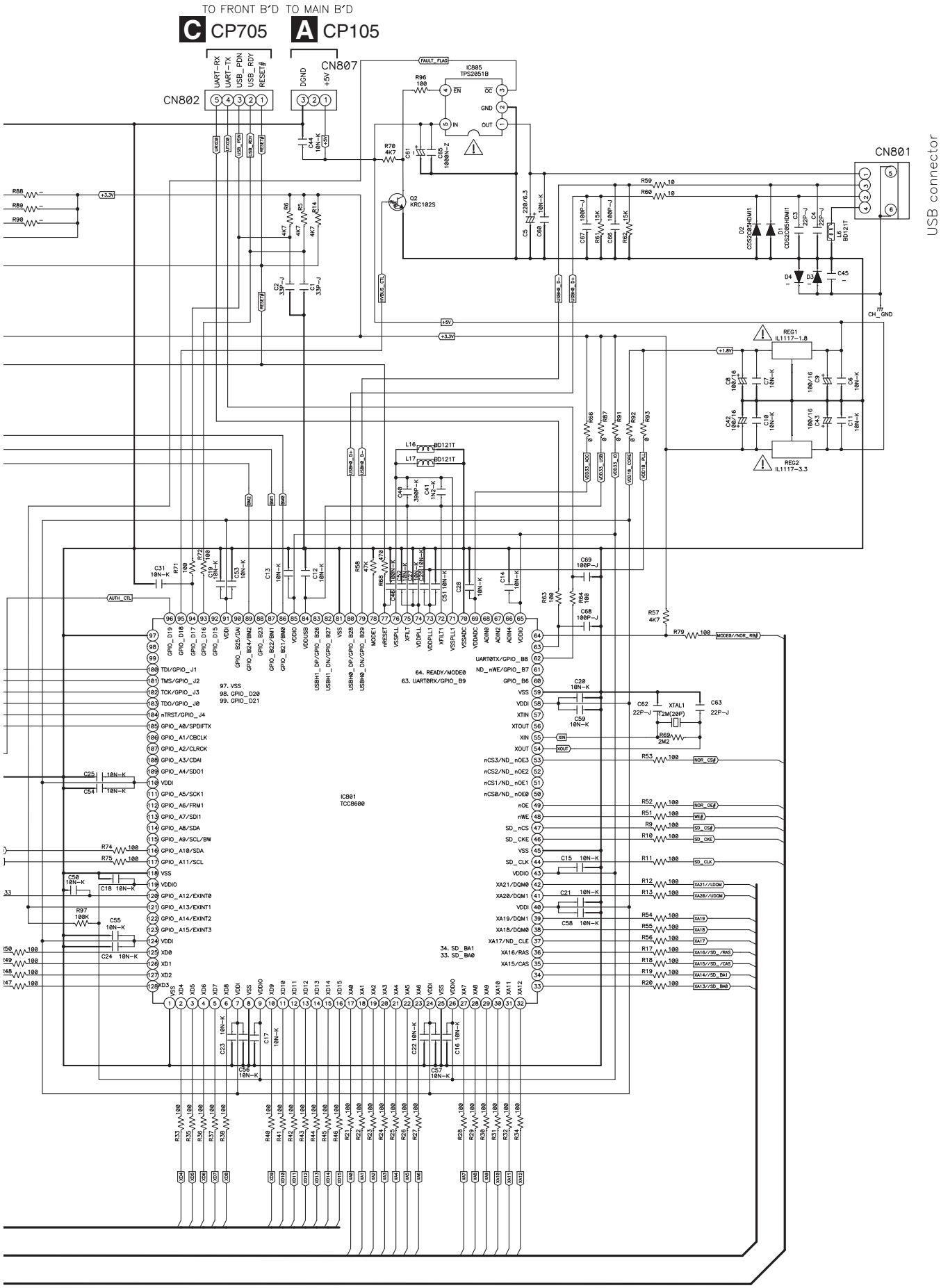
TO FRONT B'D
TO MAIN B'D
C CP705
A CP105
CN802
CN807
UART-RX
UART-TX
USB_PDN
USB_RDY
RESET#
DGND
+5V
IC805
TPS2051B
EN
OC
GND
OUT
IN
Q2
KRC102S
CN801
USB connector
D2
CDS2C05HDM1
D1
CDS2C05HDM1
L6
BD121T
D4
D3
C45
CH_GND
REG1
IL1117-1.8
REG2
IL1117-3.3
L16
BD121T
L17
BD121T
IC801
TCC8600
64. READY/MODE0
63. UART0RX/GPIO_B9
97. VSS
98. GPIO_D20
99. GPIO_D21
34. SD_BA1
33. SD_BA0
XTAL1
12M(20P)
AUTH_CTL
MODE0/NOR_RB#
NOR_CS#
NOR_OE#
WE#
SD_CS#
SD_CKE
SD_CLK
XA21/LDQM
XA20/UDQM
XA19
XA18
XA17
XA16/SD_/RAS
XA15/SD_/CAS
XA14/SD_BA1
XA13/SD_BA0

11. PCB CONNECTION DIAGRAM

11.1 P.C.B SUB ASSY (MAIN) and P.C.B SUB ASSY (P/T)

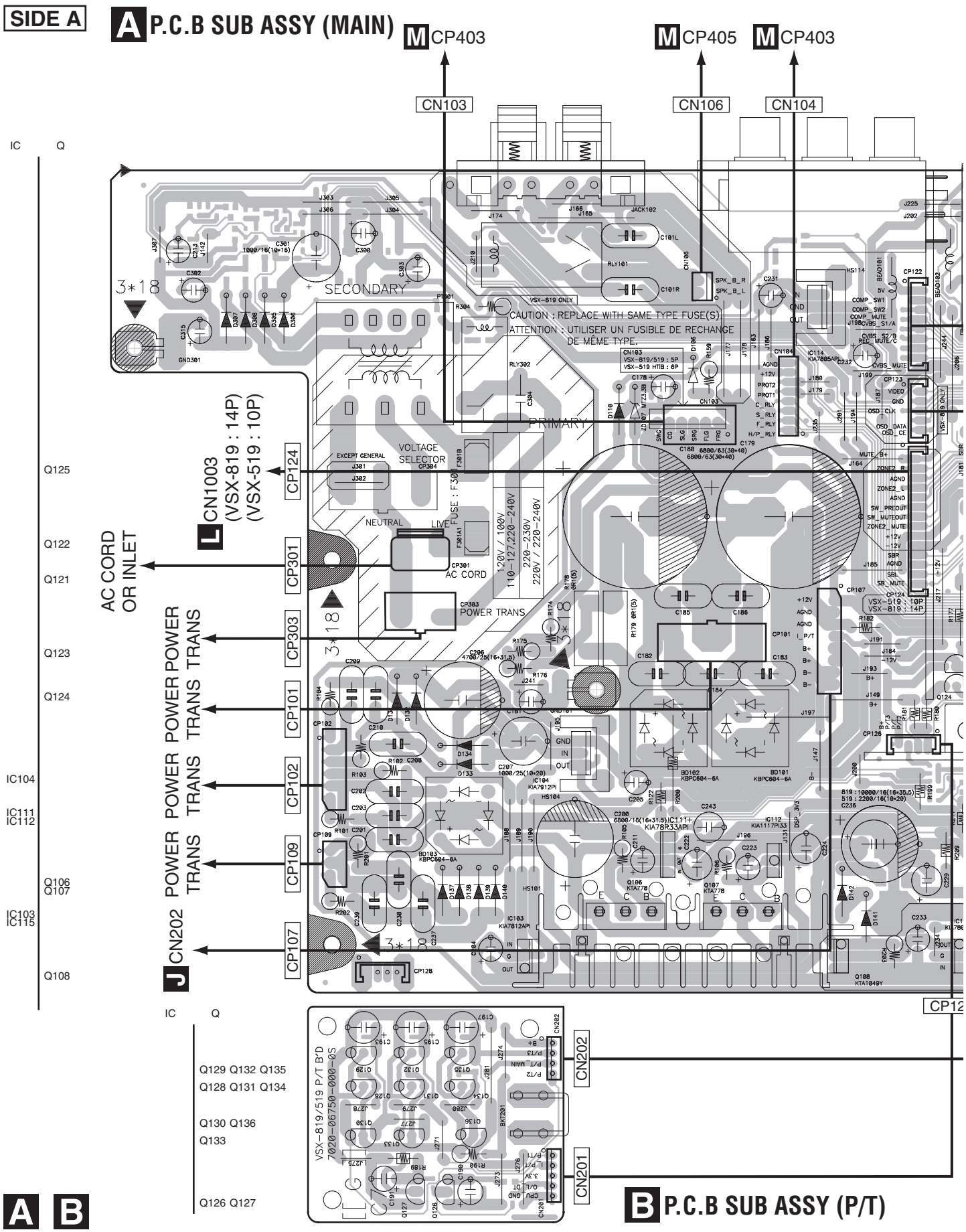

NOTE FOR PCB DIAGRAMS :

1. The parts mounted on this PCB include all necessary parts for several destinations. For further information for respective destinations, be sure to check with the schematic diagram.

2. View point of PCB diagrams.

SIDE A

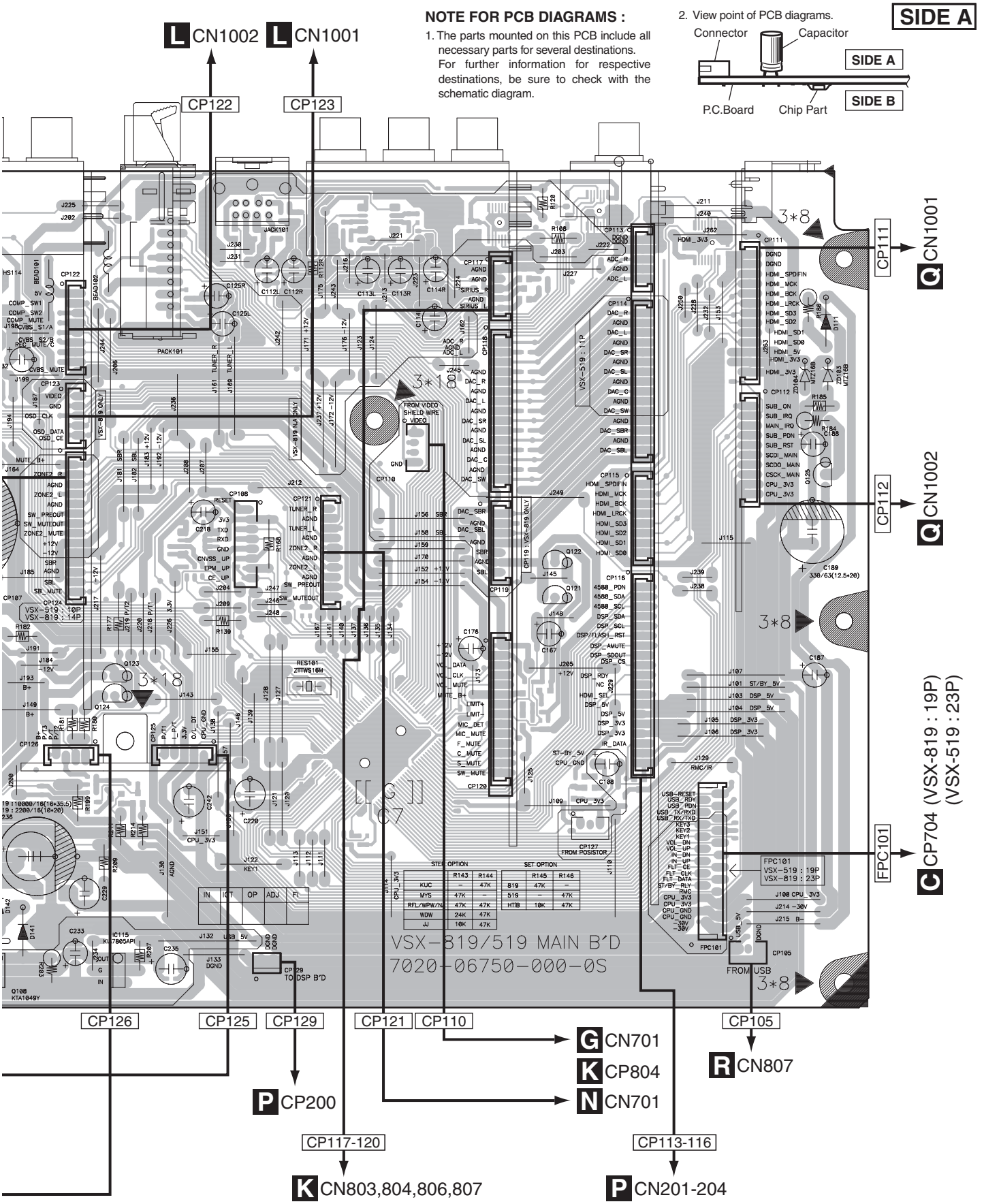

P/T)

A B

SIDE B

A P.C.B SUB ASSY (MAIN)

IC Q

IC108
IC110
IC109 Q138
IC120 Q300

Q101
Q111

Q109
Q302

IC301
IC302

Q110

Q301

IC106

IC101

Q103
Q202
Q102
Q201

IC113

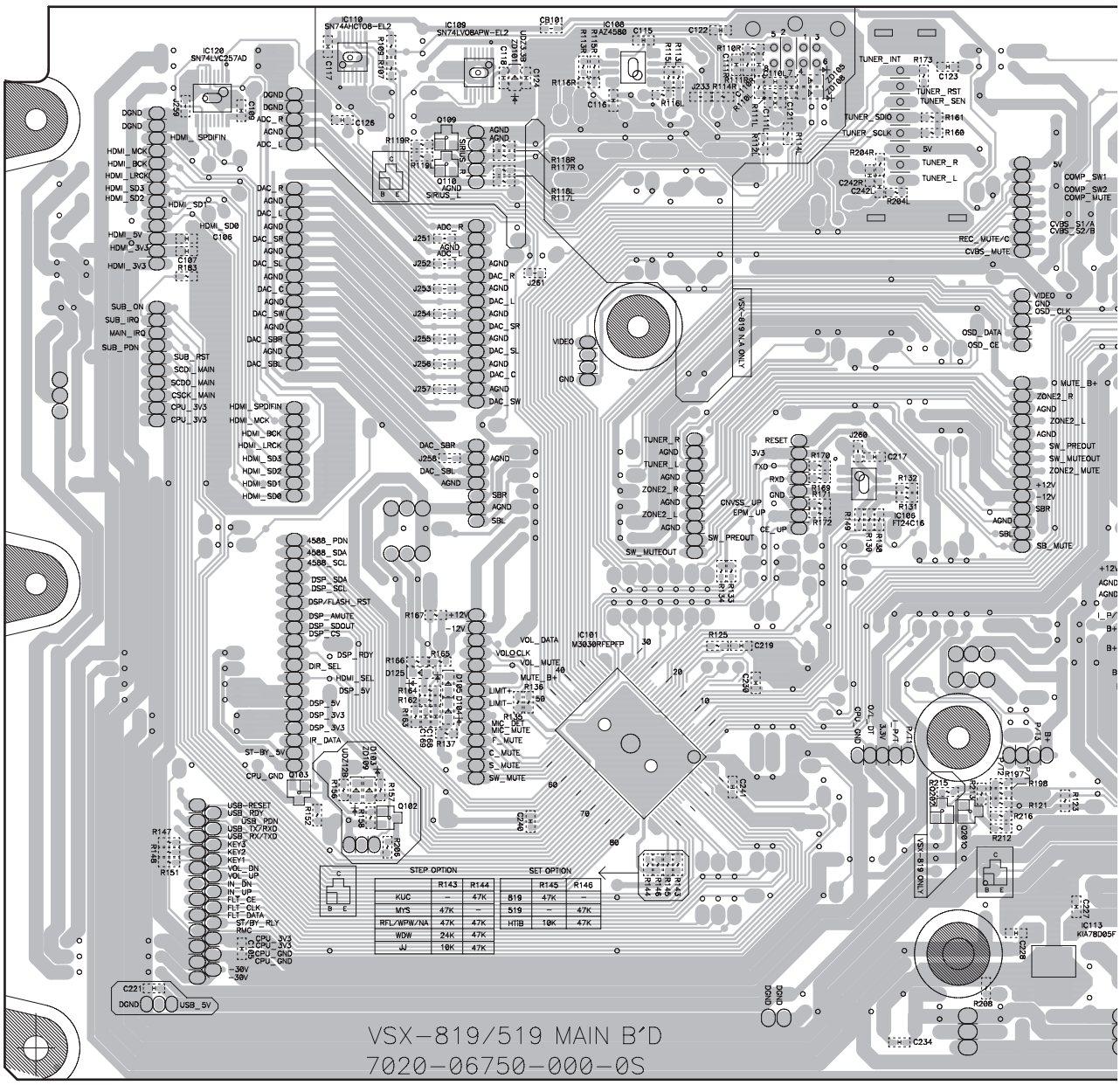

STEP OPTION	R143	R144
KUC	–	47K
MYS	47K	–
RFL/WPW/NA	47K	47K
WDW	24K	47K
JJ	10K	47K

SET OPTION	R145	R146
819	47K	–
519	–	47K
HTIB	10K	47K

SIDE B

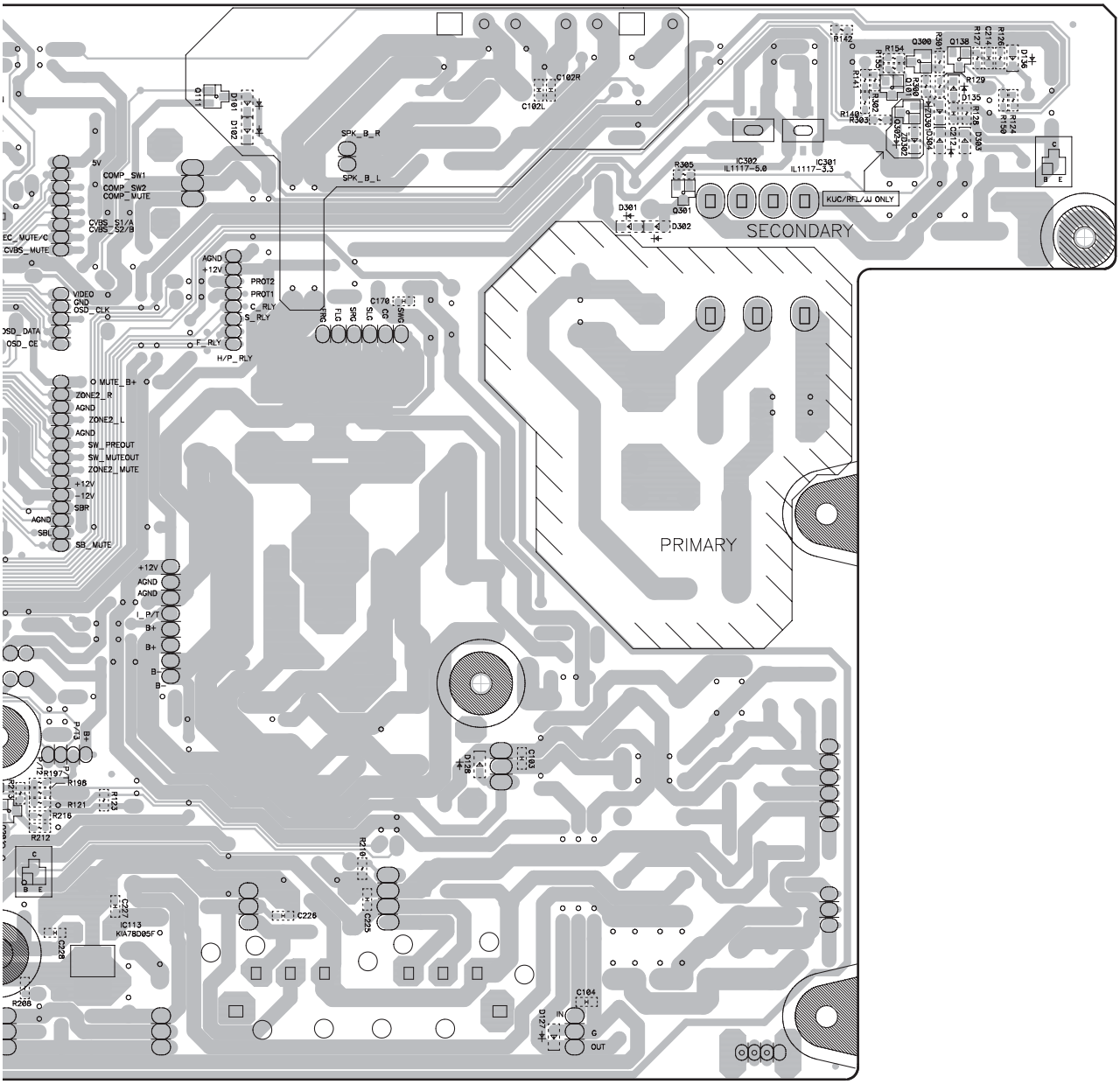

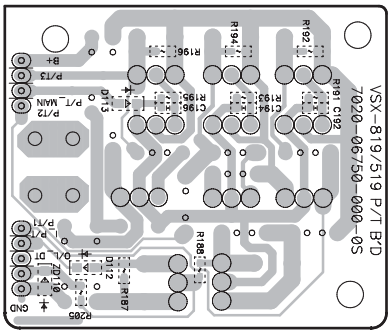

B P.C.B SUB ASSY (P/T)

VSX-819H-K

A B

11.2 P.C.B SUB ASSYS (FRONT)

SIDE A

C P.C.B SUB ASSY (FRONT)

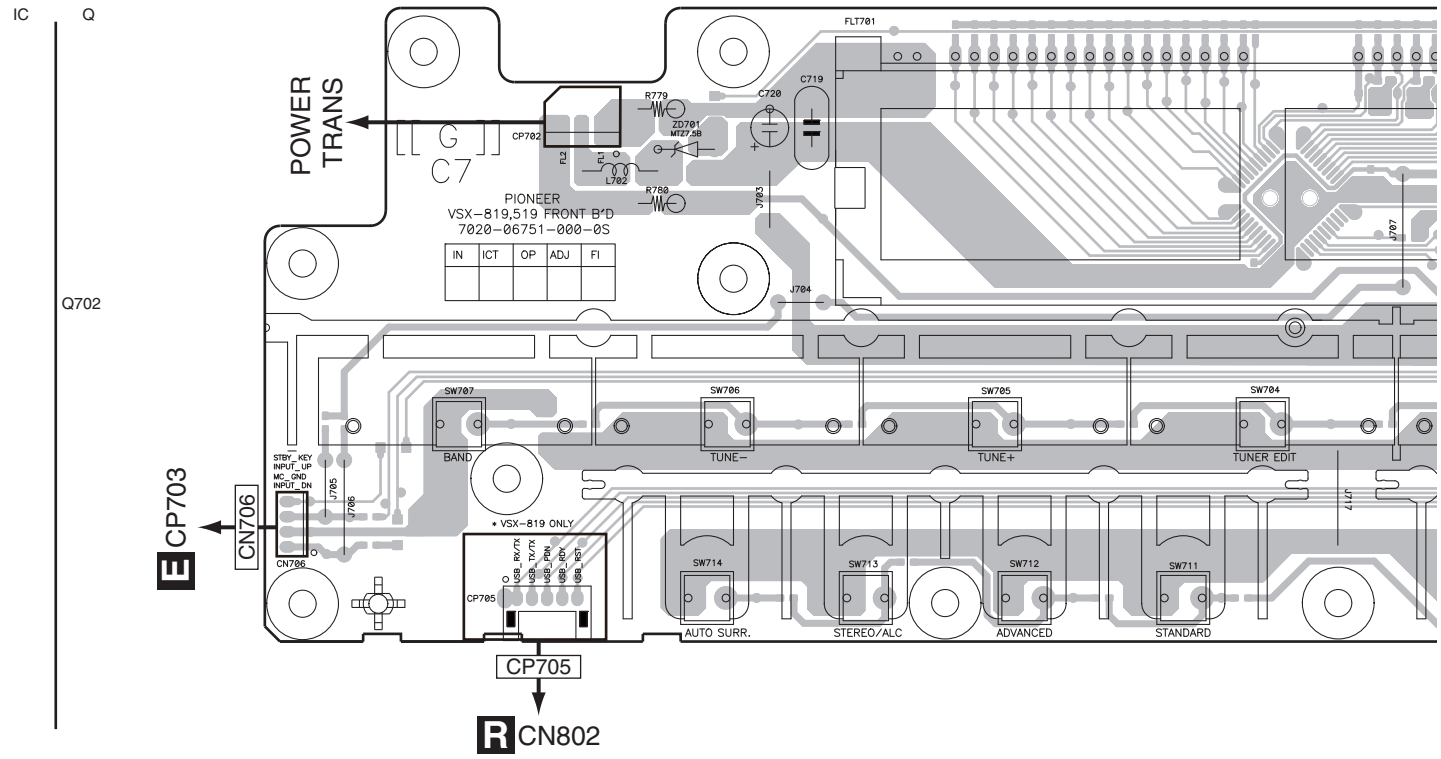

SIDE B

C P.C.B SUB ASSY (FRONT)

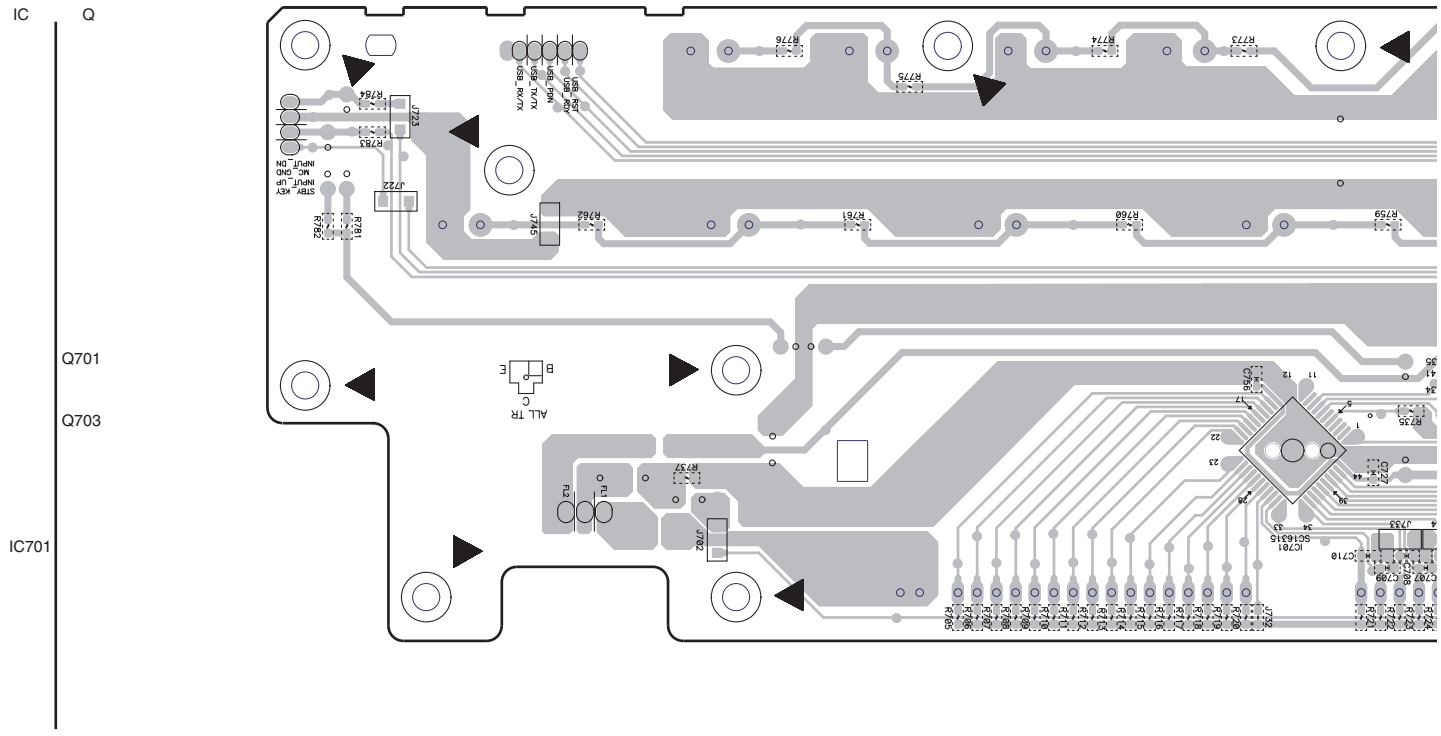

SIDE A

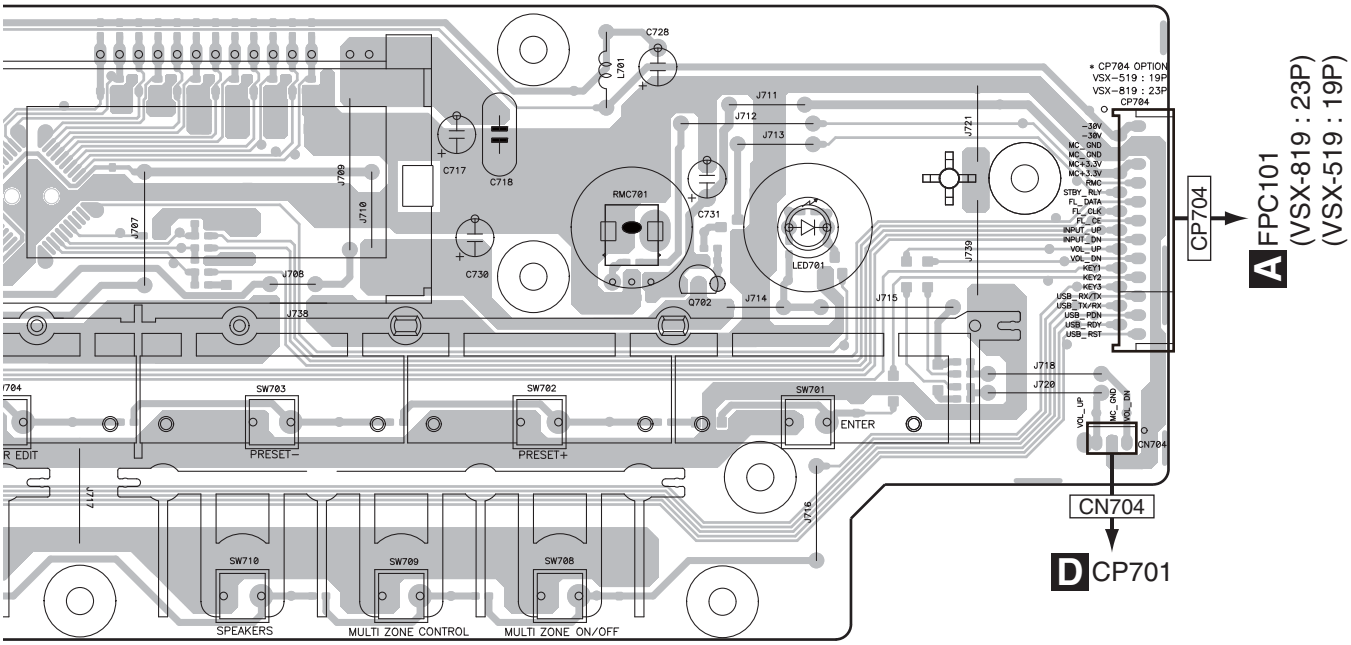
* CP704 OPTION
VSX-519 : 19P
VSX-819 : 23P
CP704
CP704
A FPC101
(VSX-819 : 23P)
(VSX-519 : 19P)
CN704
D CP701
SW703
SW702
SW701
PRESET−
PRESET+
ENTER
SW710
SW709
SW708
SPEAKERS
MULTI ZONE CONTROL
MULTI ZONE ON/OFF
RMC701
LED701
Q702
C728
L701
C717
C718
C730
C731

SIDE B

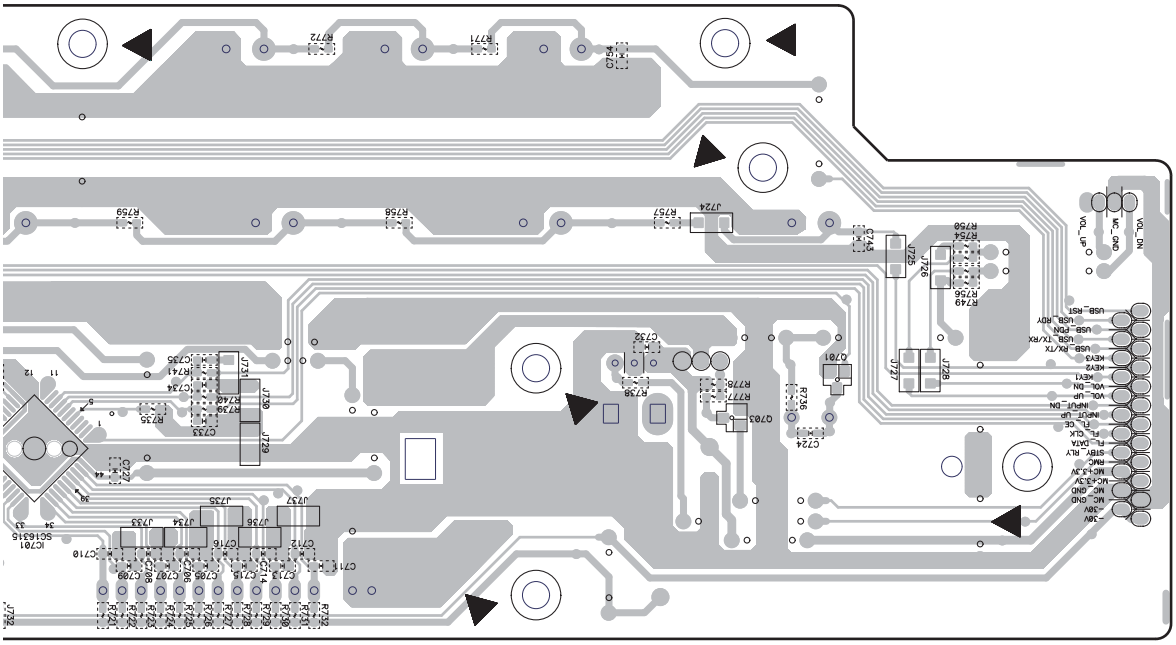

11.3 P.C.B SUB ASSYS (VOLUME), (FUNCTION), (HEADPHONE), (F-VIDEO) and (MIC)

SIDE A

SIDE A

D P.C.B SUB ASSY(VOLUME)

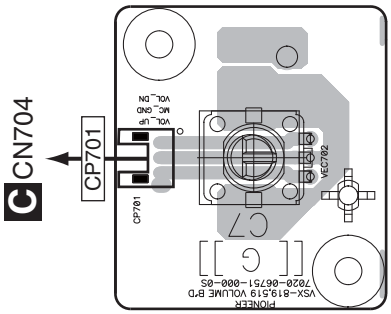

H P.C.B SUB ASSY (MIC)

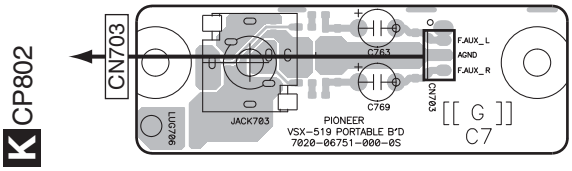

F P.C.B SUB ASSY (HEADPHONE)

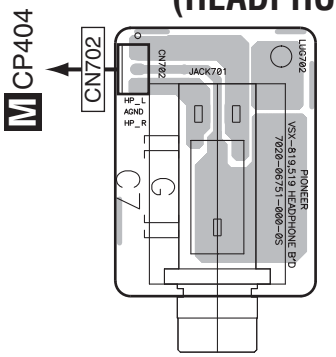

G P.C.B SUB ASSY (F-VIDEO)

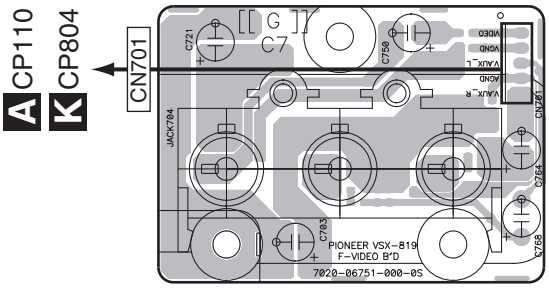

E P.C.B SUB ASSY (FUNCTION)

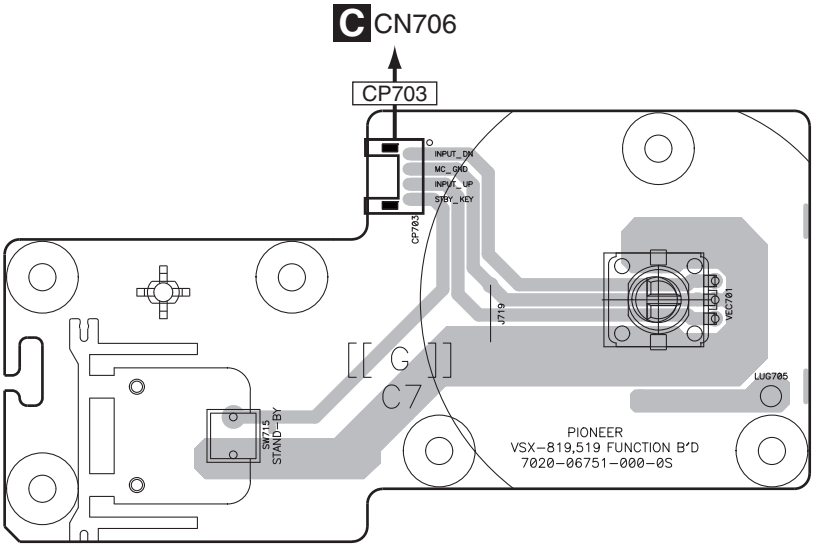

D E F G H

SIDE B

SIDE B

D P.C.B SUB ASSY(VOLUME)

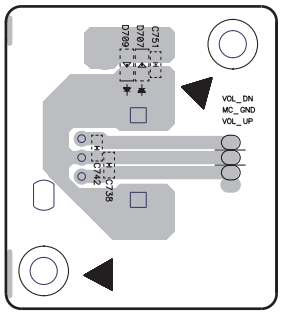

H P.C.B SUB ASSY (MIC)

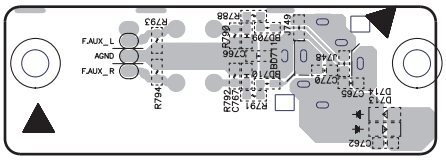

F P.C.B SUB ASSY (HEADPHONE)

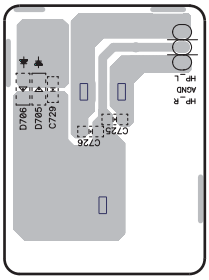

G P.C.B SUB ASSY (F-VIDEO)

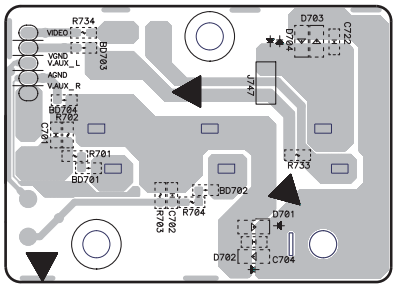

E P.C.B SUB ASSY (FUNCTION)

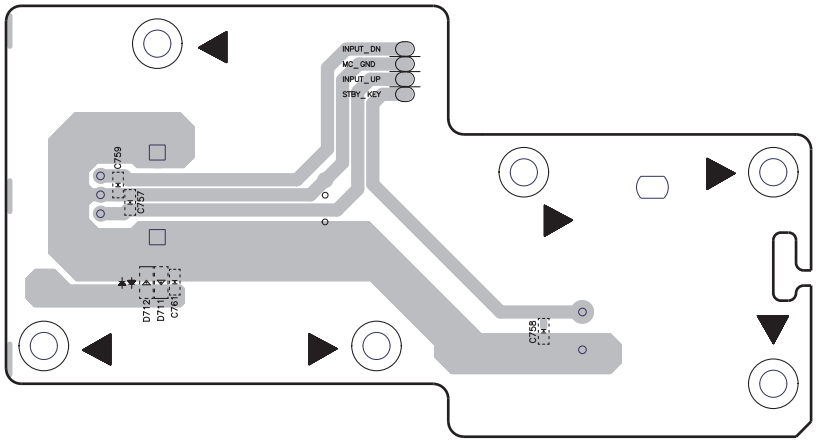

D E F G H

11.4 P.C.B SUB ASSY (AMP)

SIDE A

J P.C.B SUB ASSY (AMP)

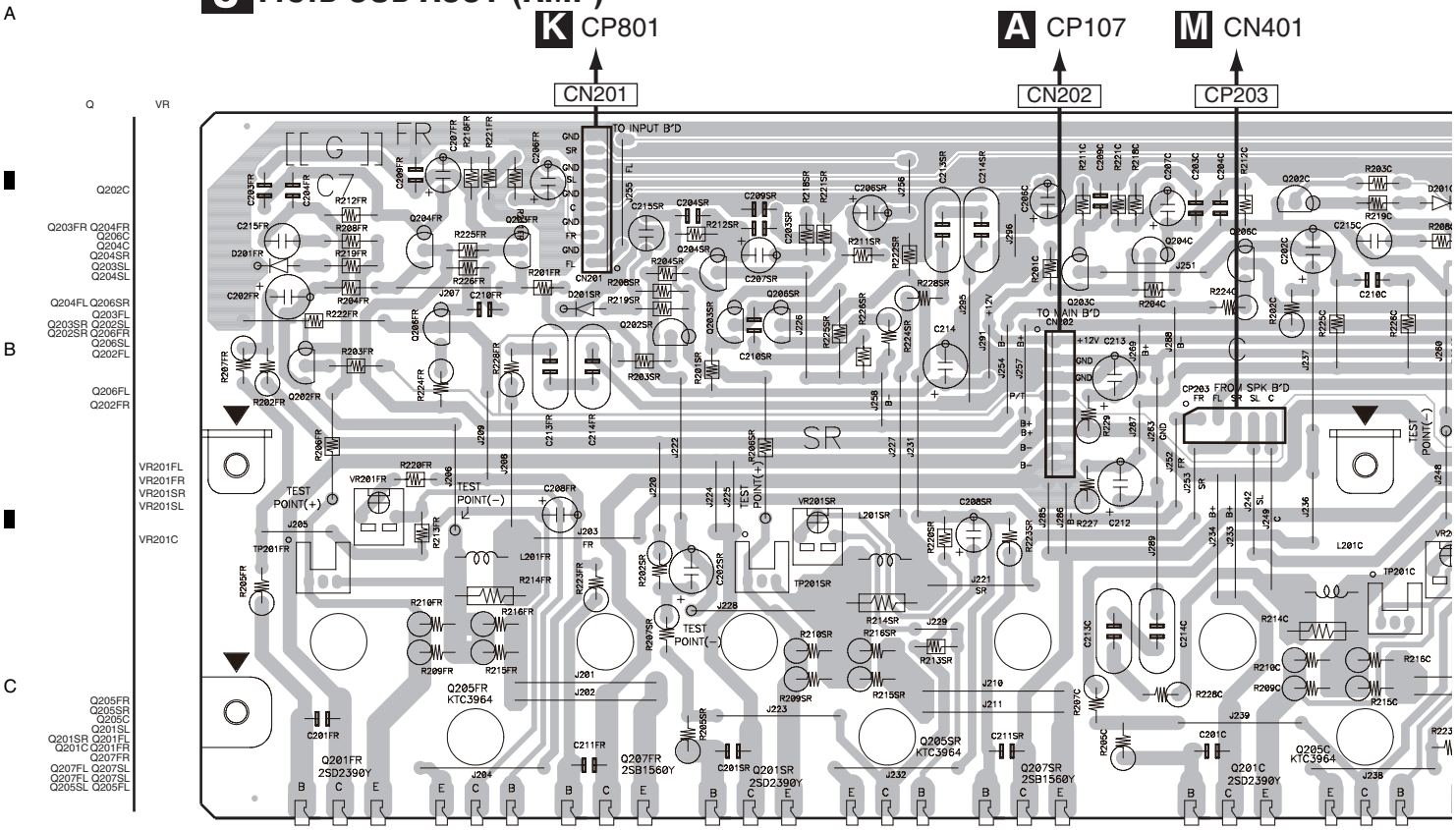

SIDE B

J P.C.B SUB ASSY (AMP)

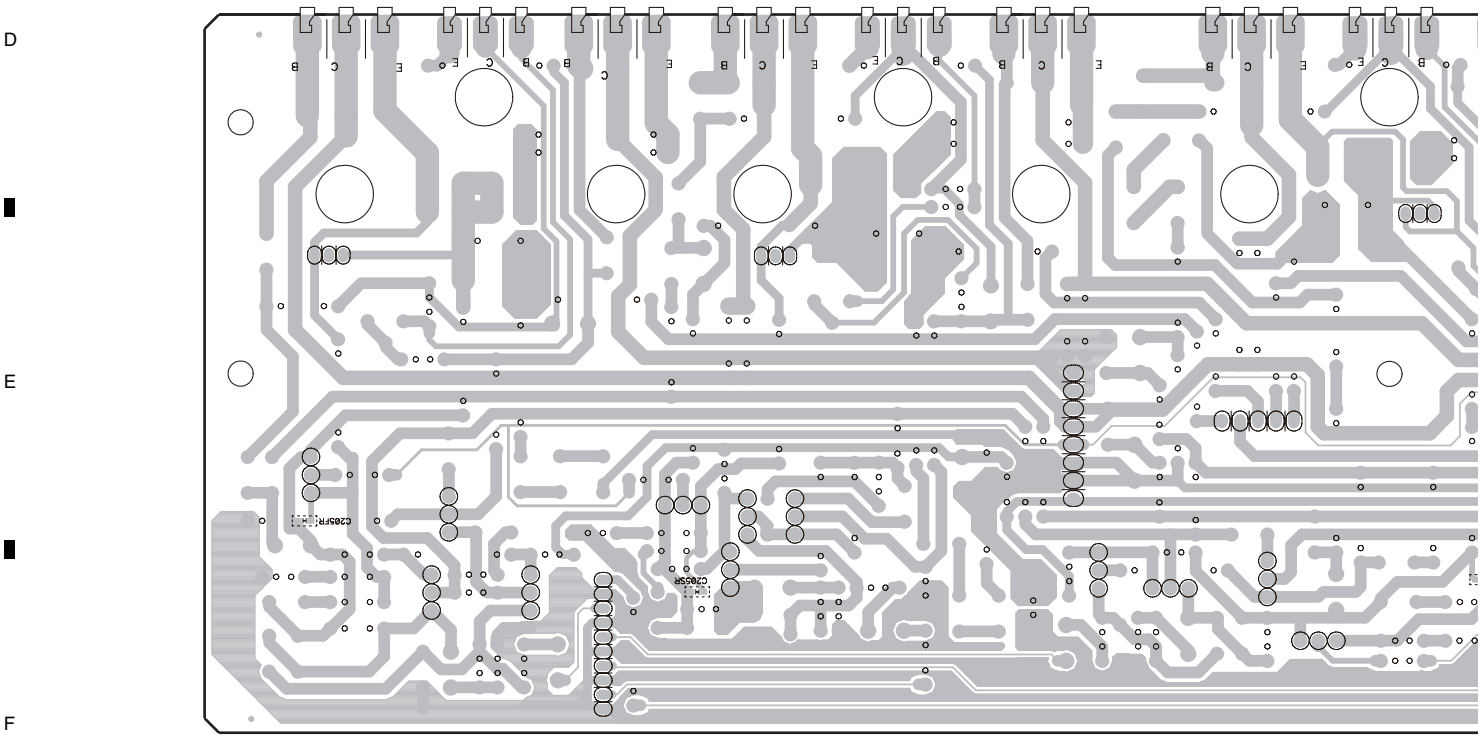

SIDE A

01

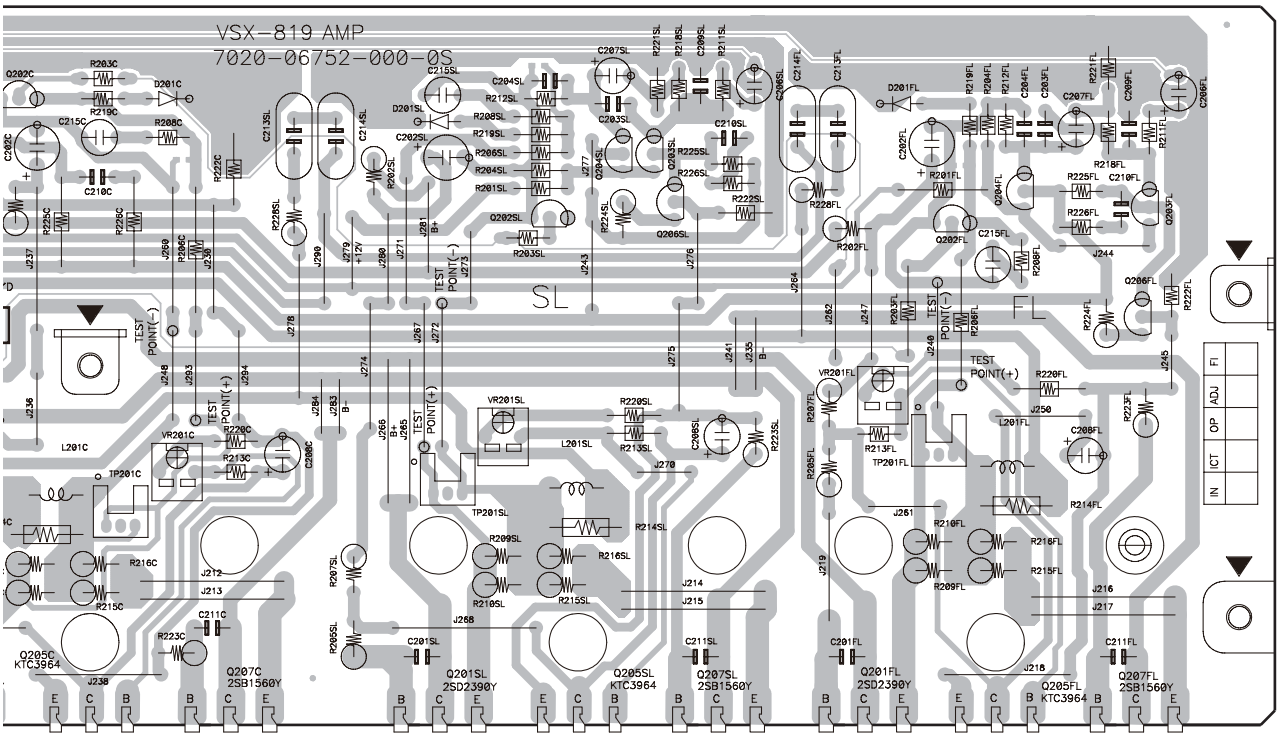

SIDE B

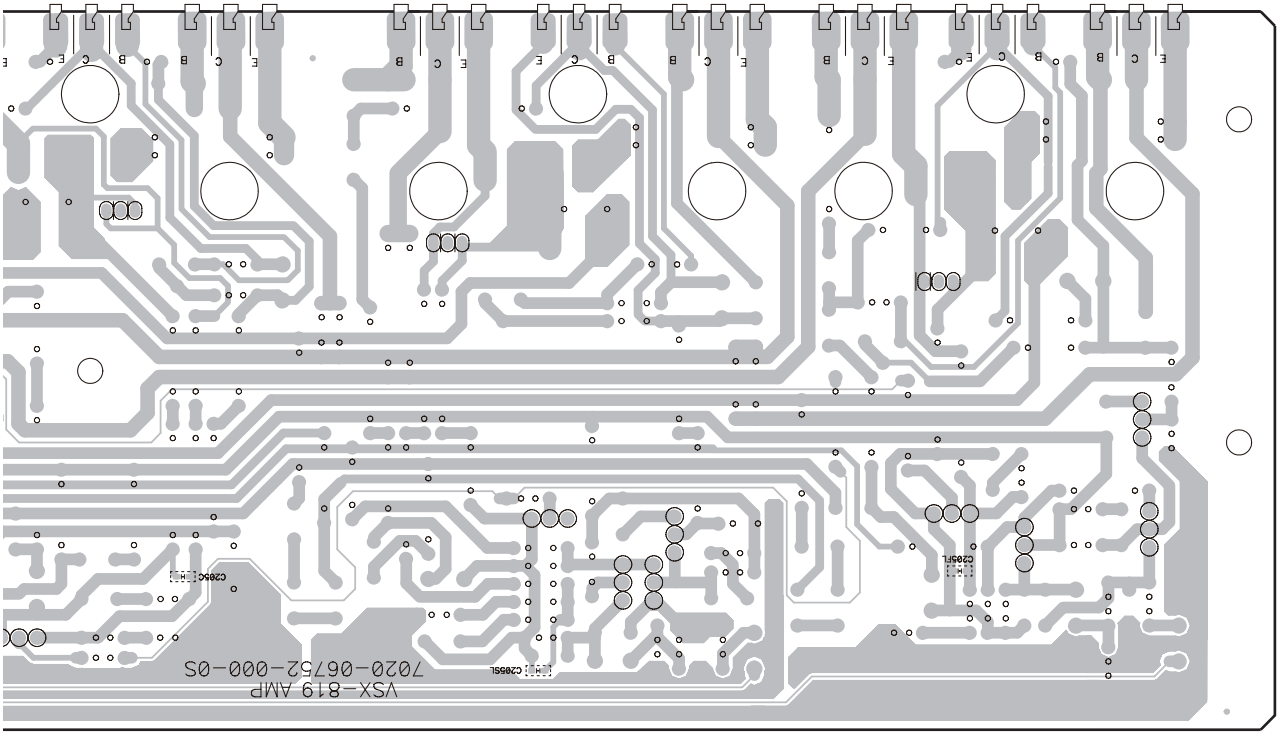

11.5 P.C.B SUB ASSY (INPUT-819)

SIDE A

SIDE A

K P.C.B SUB ASSY (INPUT-819)

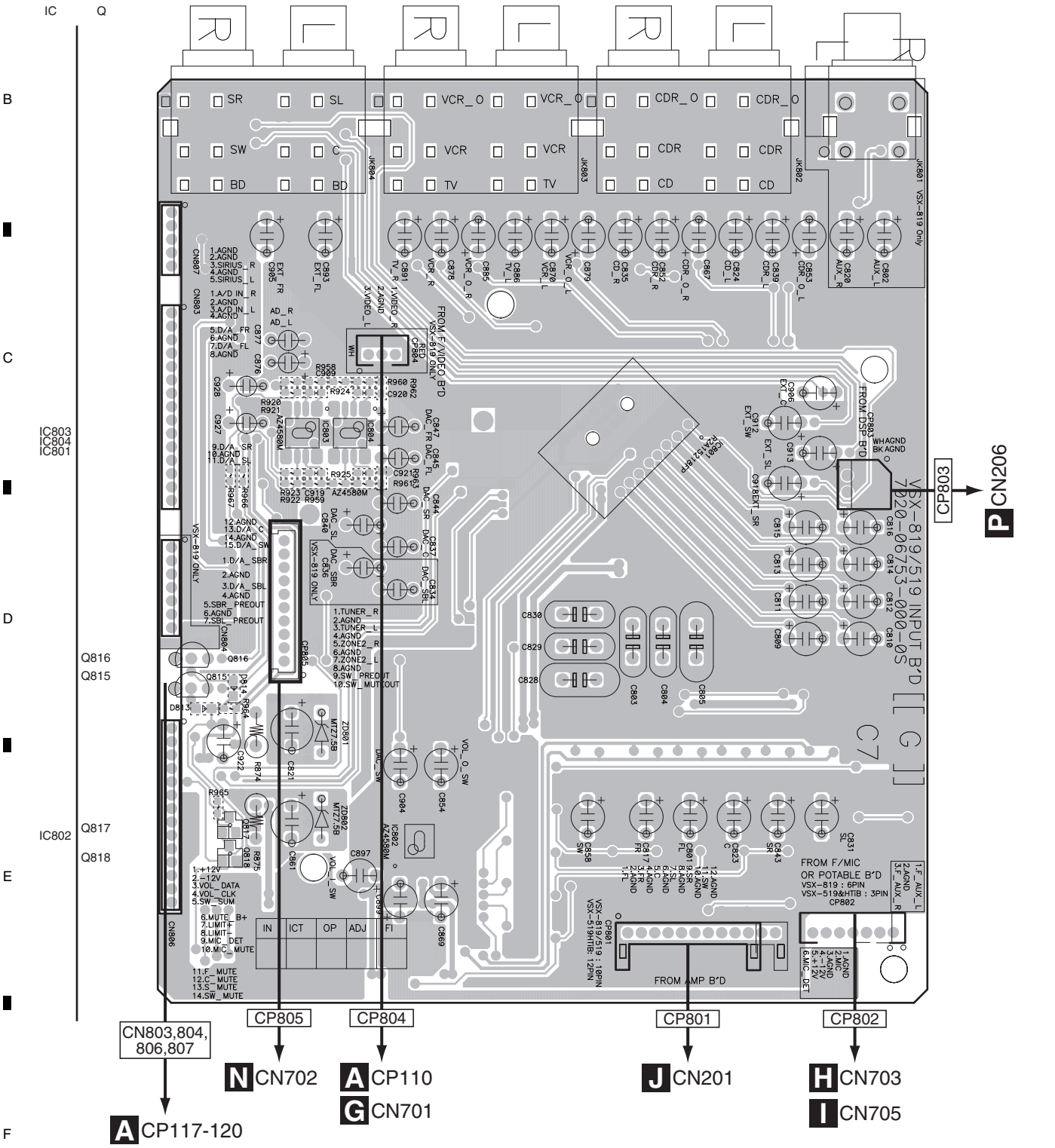

SIDE B

SIDE B

K P.C.B SUB ASSY (INPUT-819)

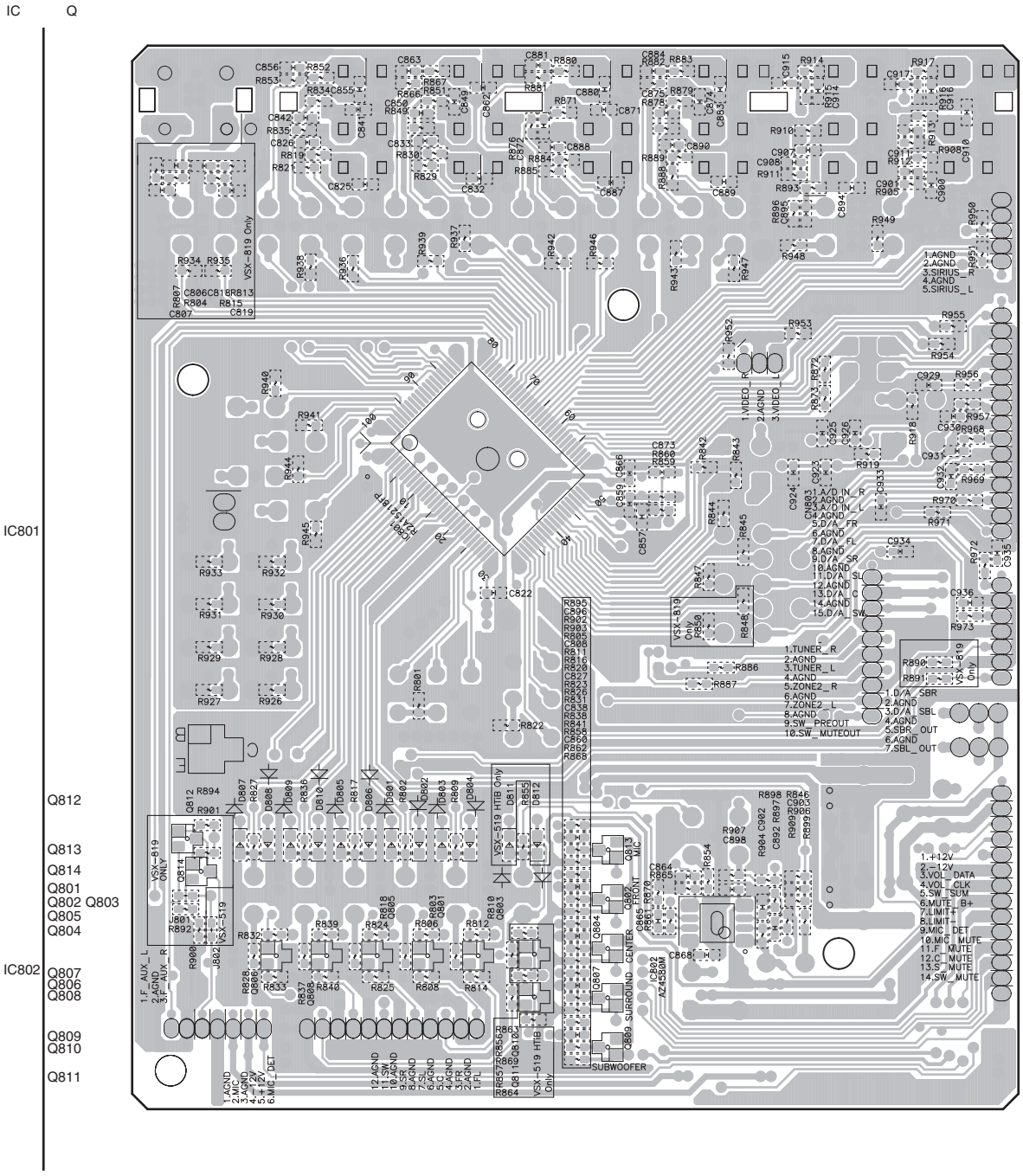

11.6 P.C.B SUB ASSY (VIDEO-819)

SIDE A

L P.C.B SUB ASSY (VIDEO-819)

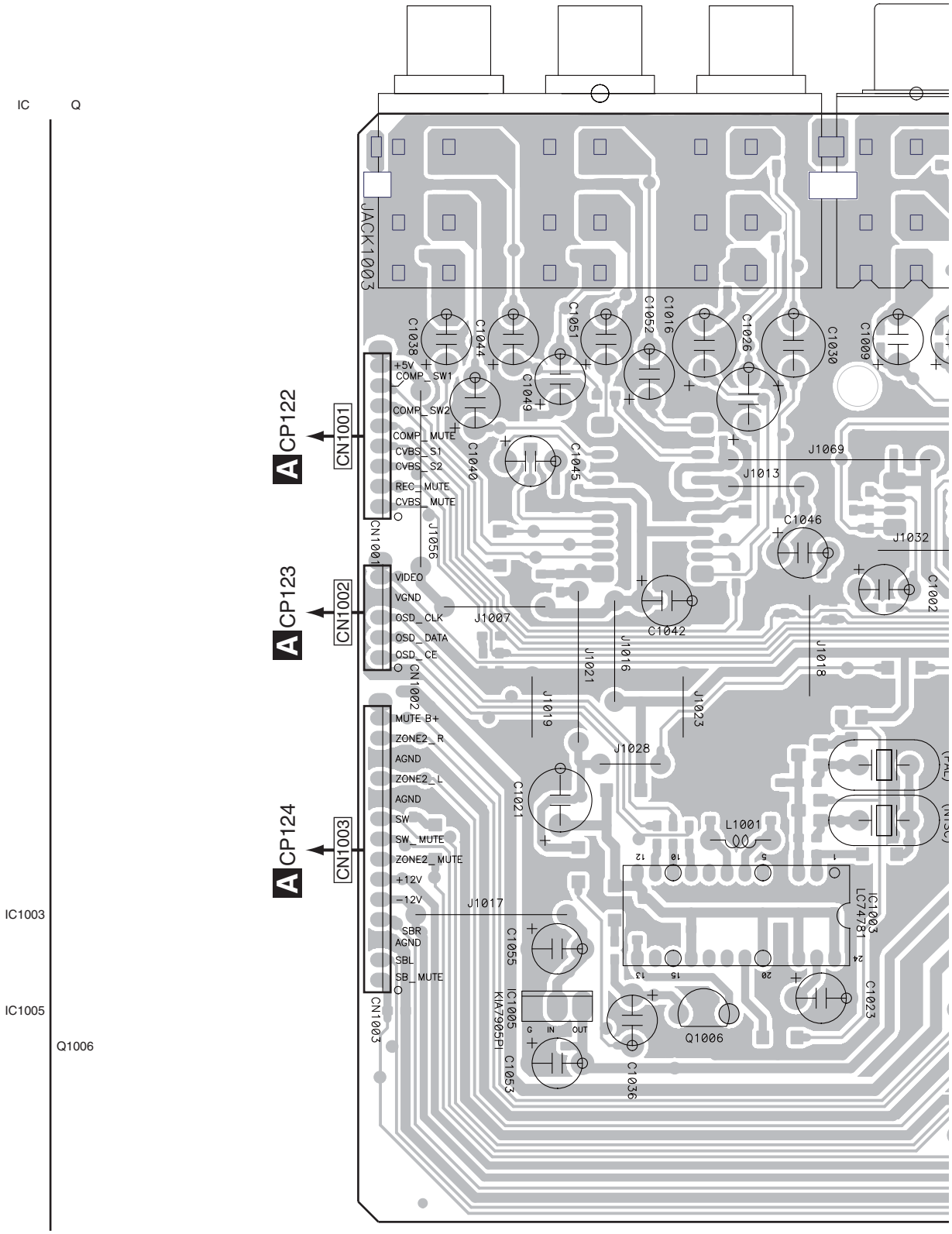

SIDE A

A

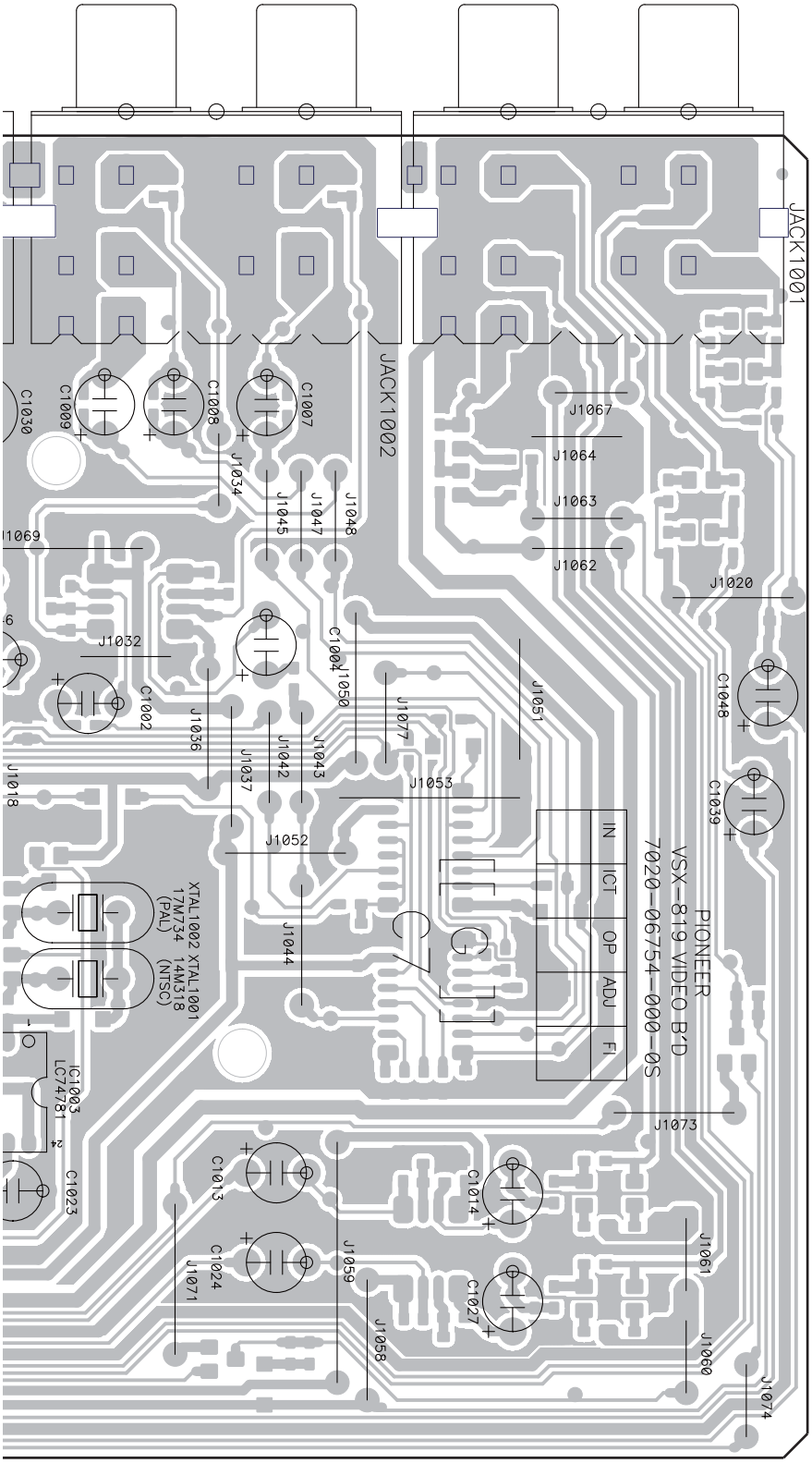

B

C

D

E

F

L

SIDE B

L P.C.B SUB ASSY (VIDEO-819)

IC	Q
	Q1012
	Q1008
	Q1011
IC1004	Q1010
IC1008	Q1007
	Q1009
IC1001	Q1017
	Q1016
	Q1015
IC1002	
	Q1014
	Q1002
	Q1003
IC1007	Q1004
	Q1005
	Q1013

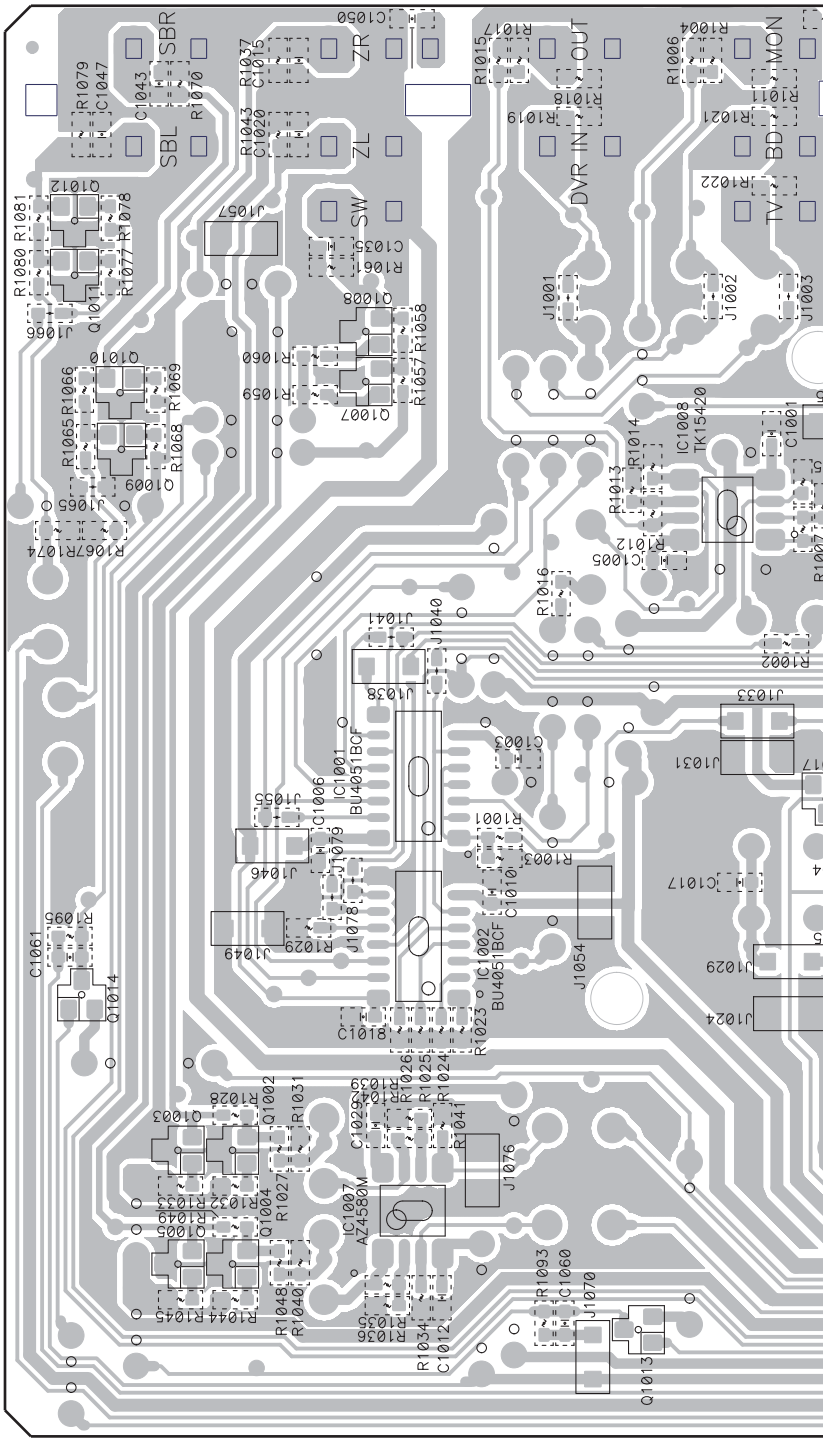

SIDE B

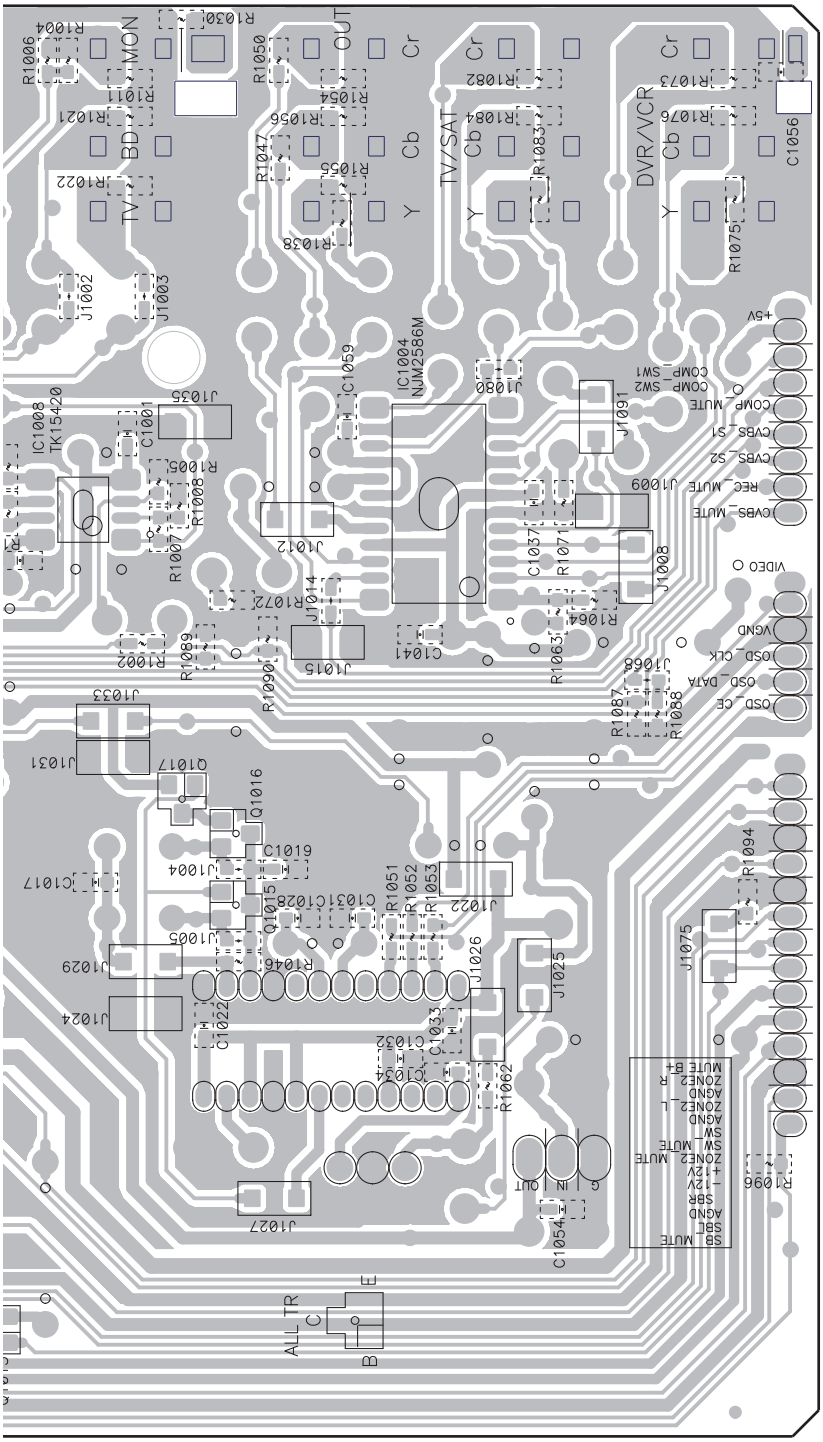
BD
TV
MON
OUT
Y
Cb
Cr
TV/SAT
DVR/VCR
IC1004
NJM2586M
IC1008
TK15420
+5V
COMP_SW2
COMP_SW1
COMP_MUTE
CVBS_S1
CVBS_S2
REC_MUTE
CVBS_MUTE
VIDEO
VGND
OSD_CLK
OSD_DATA
OSD_CE
SB_MUTE
SEL
AGND
SBR
+12V
-12V
ZONE2_MUTE
SW_MUTE
SW_
AGND
ZONE2_L
ZONE2_R
MUTE B+
G
IN
OUT
ALL TR
C
B
E

11.7 P.C.B SUB ASSY (SPEAKER-819)

SIDE A

SIDE A

M P.C.B SUB ASSY (SPEAKER-819)

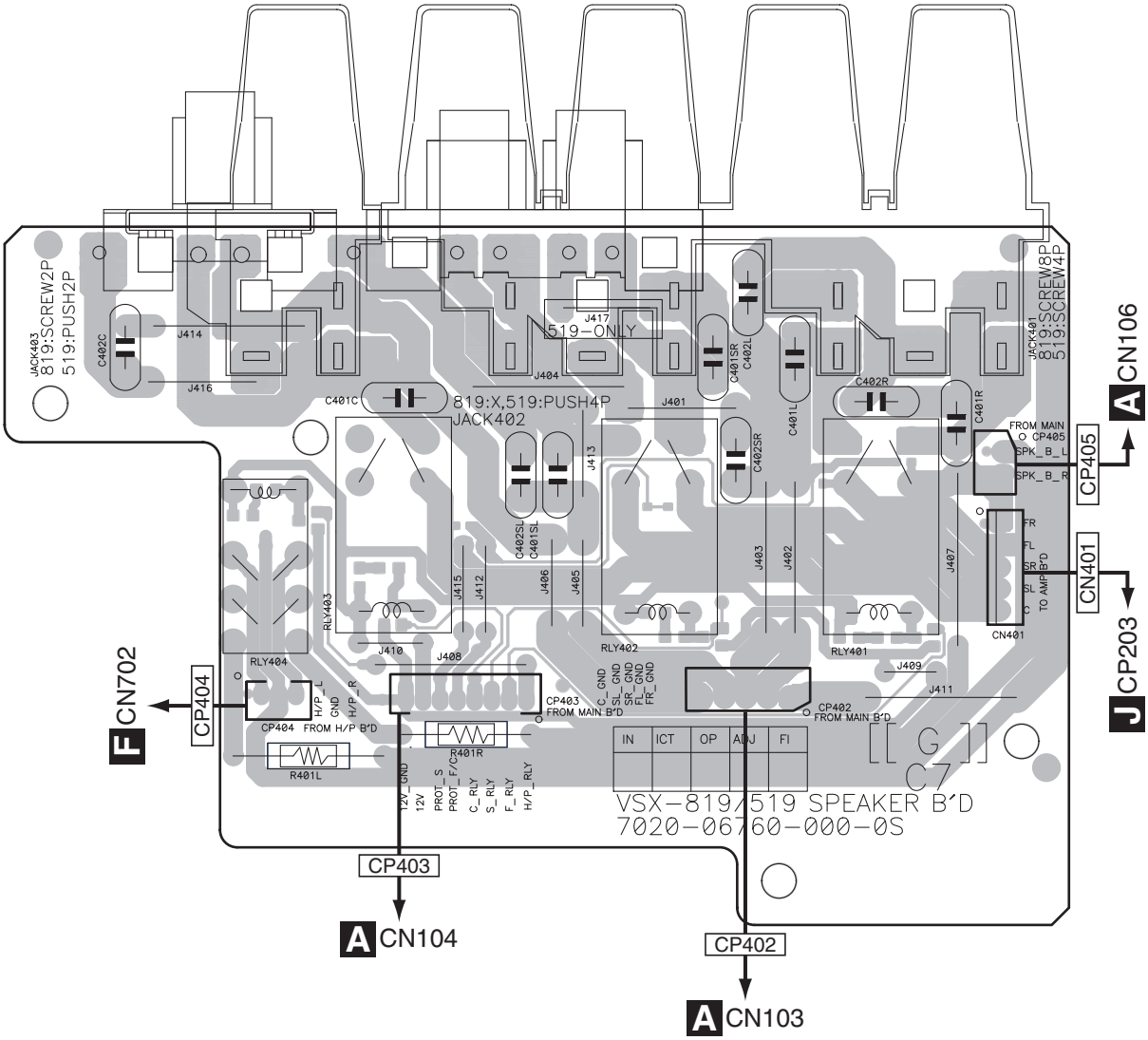

SIDE B

SIDE B

A

M P.C.B SUB ASSY (SPEAKER-819)

B

C

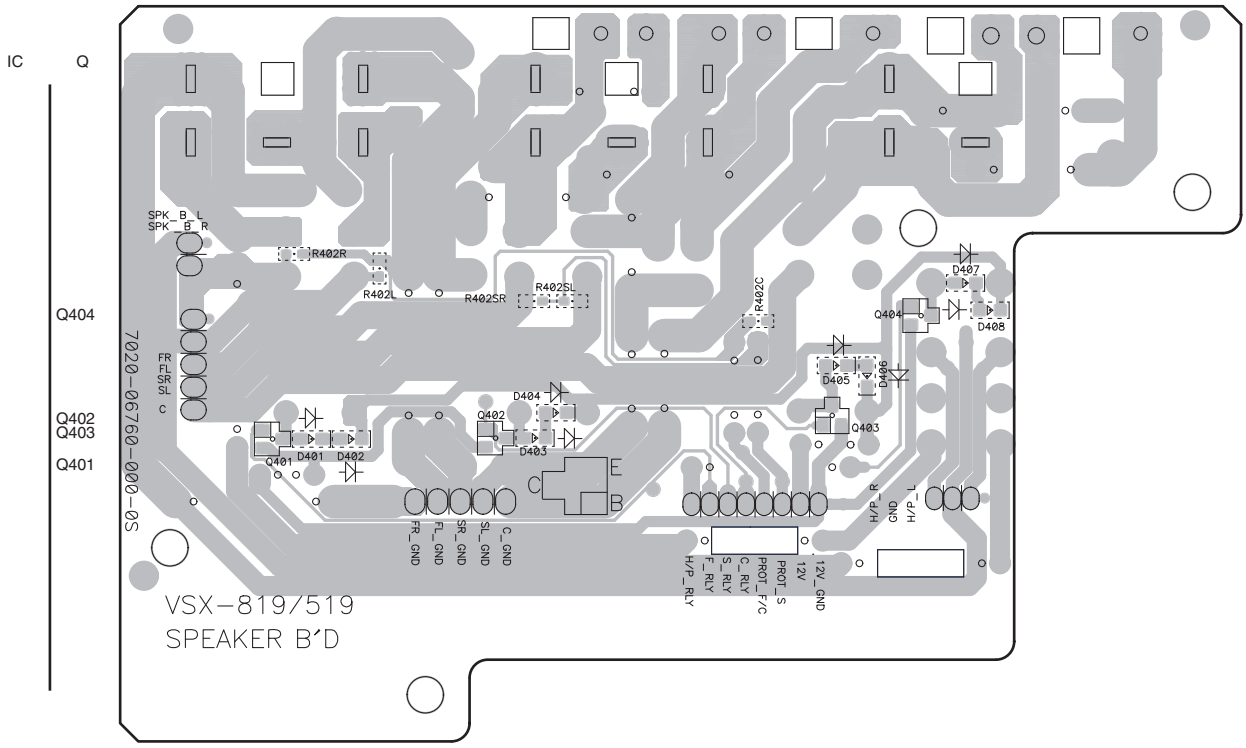

D

E

F

M

M

11.8 P.C.B SUB ASSY (DSP) and P.C.B SUB ASSY (CNT)

SIDE A

P P.C.B SUB ASSY (DSP)

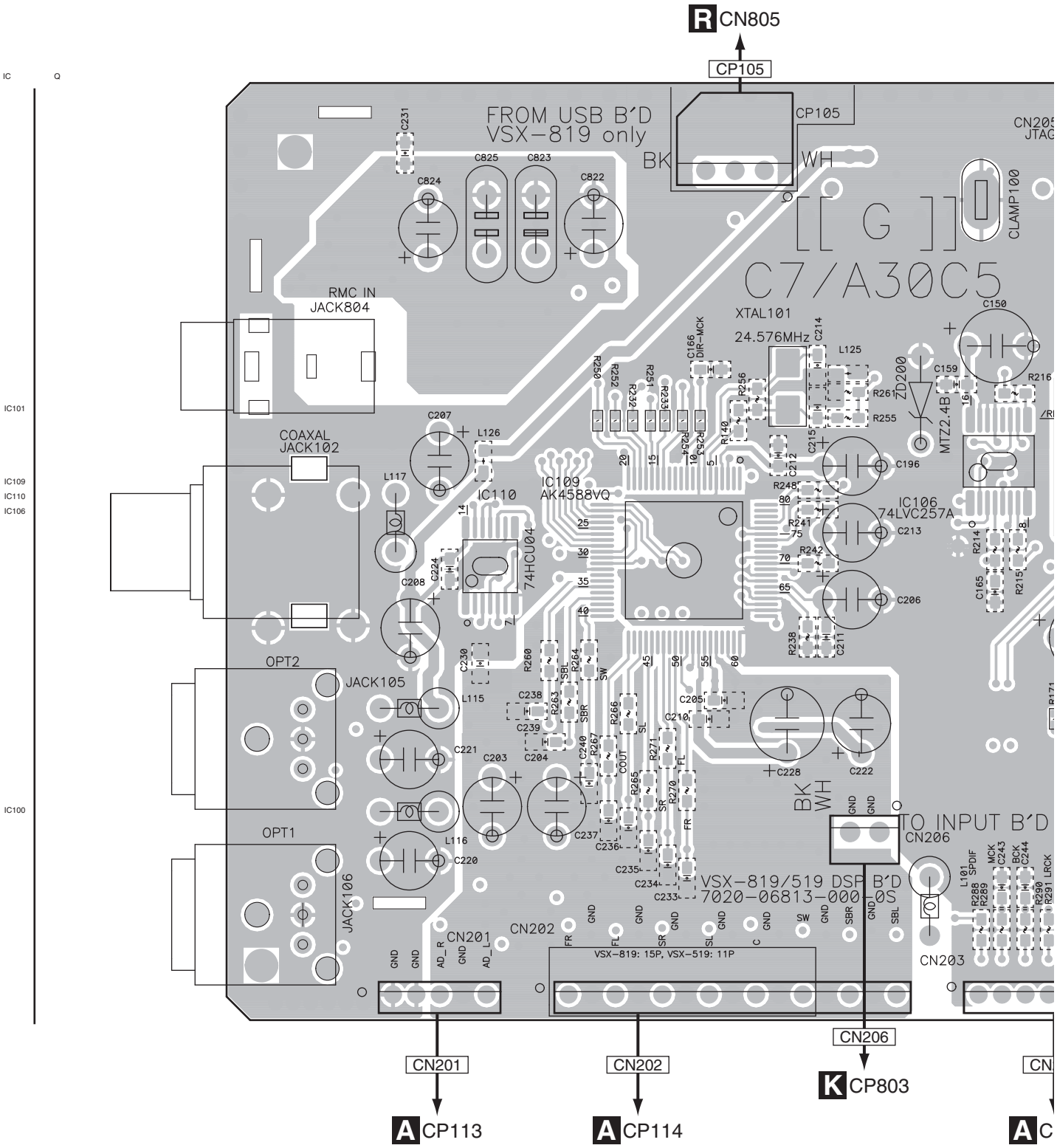

N P

SIDE A

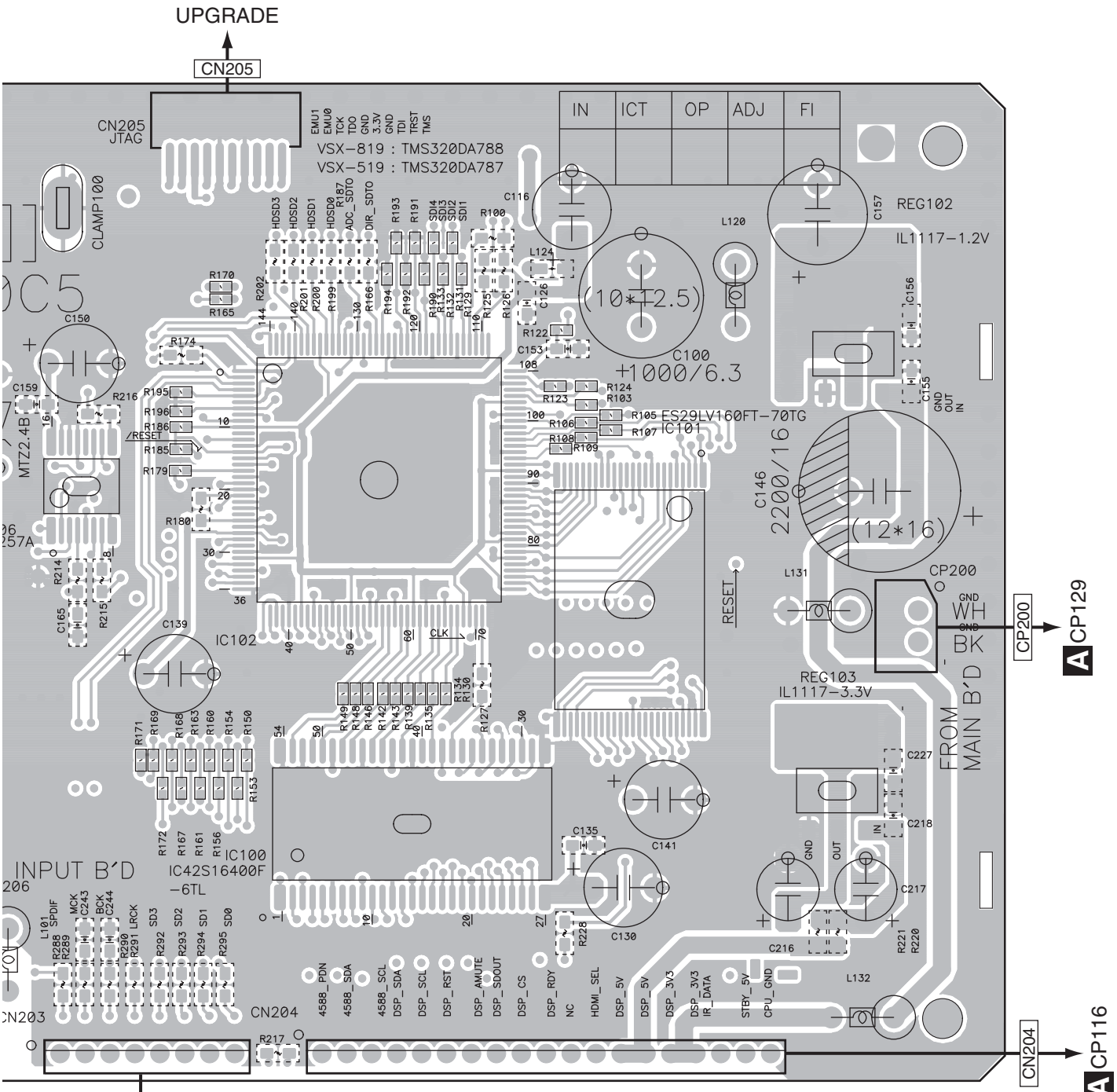
UPGRADE
CN205
CN205 JTAG
VSX-819 : TMS320DA788
VSX-519 : TMS320DA787
CLAMP100
IN
ICT
OP
ADJ
FI
REG102
IL1117-1.2V
C100
+1000/6.3
IC101
ES29LV160FT-70TG
C146
2200/16
(12*16)
CP200
REG103
IL1117-3.3V
FROM MAIN B'D
IC102
IC100
IC42S16400F
-6TL
INPUT B'D
CN203
CN204
CN203
CP115
CP129
CP116
P.C.B SUB ASSY (CNT)
CP121
CN701
CN702
CP805
VSX-819/519 CNT B'D
7020-06750-000-0S

SIDE B

P P.C.B SUB ASSY (DSP)

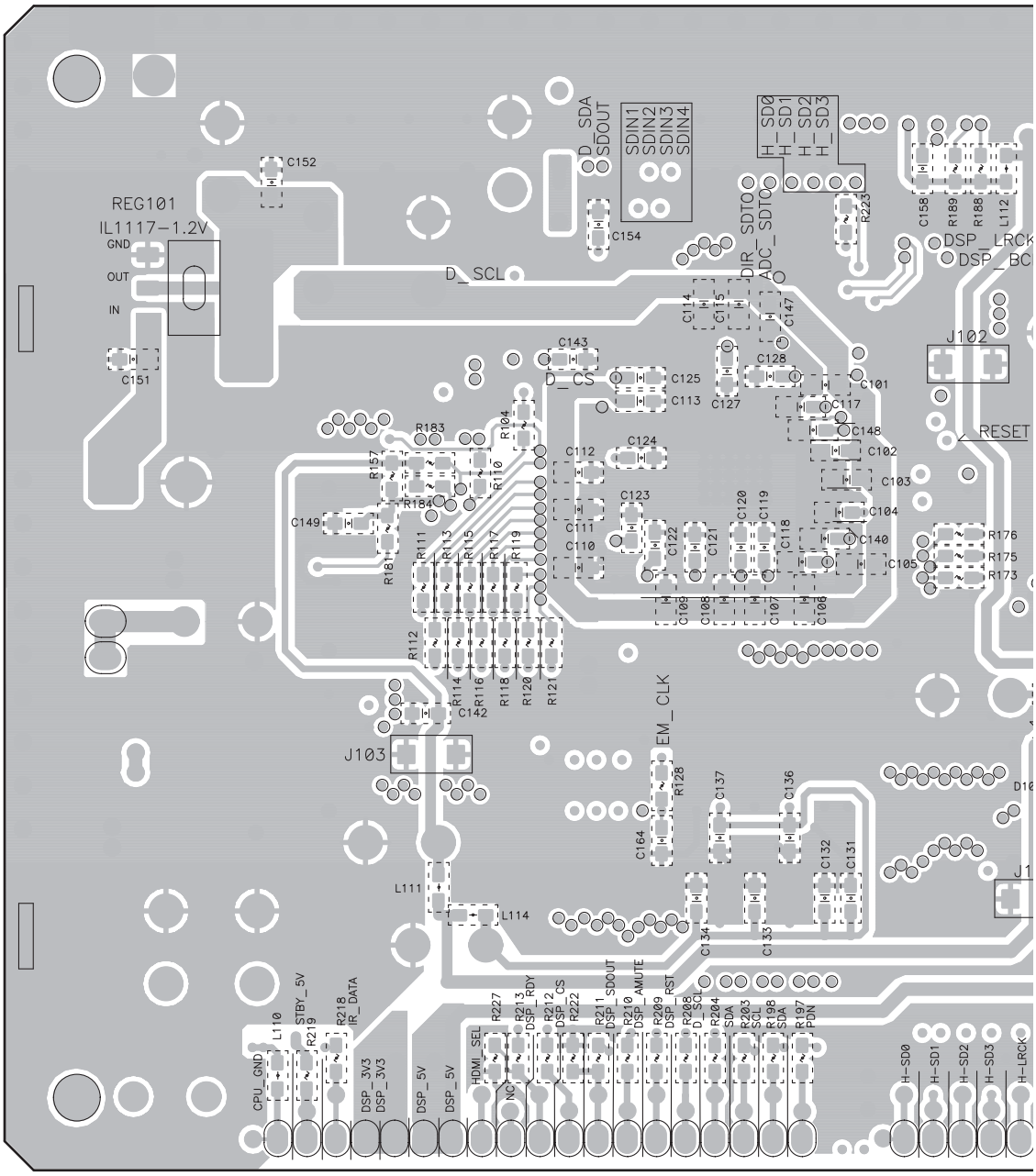

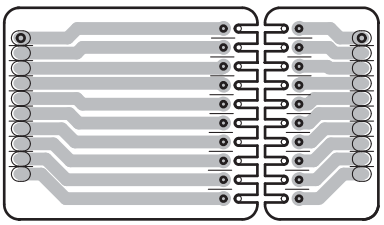

N P.C.B SUB ASSY (CNT)

N P

SIDE B

A

B

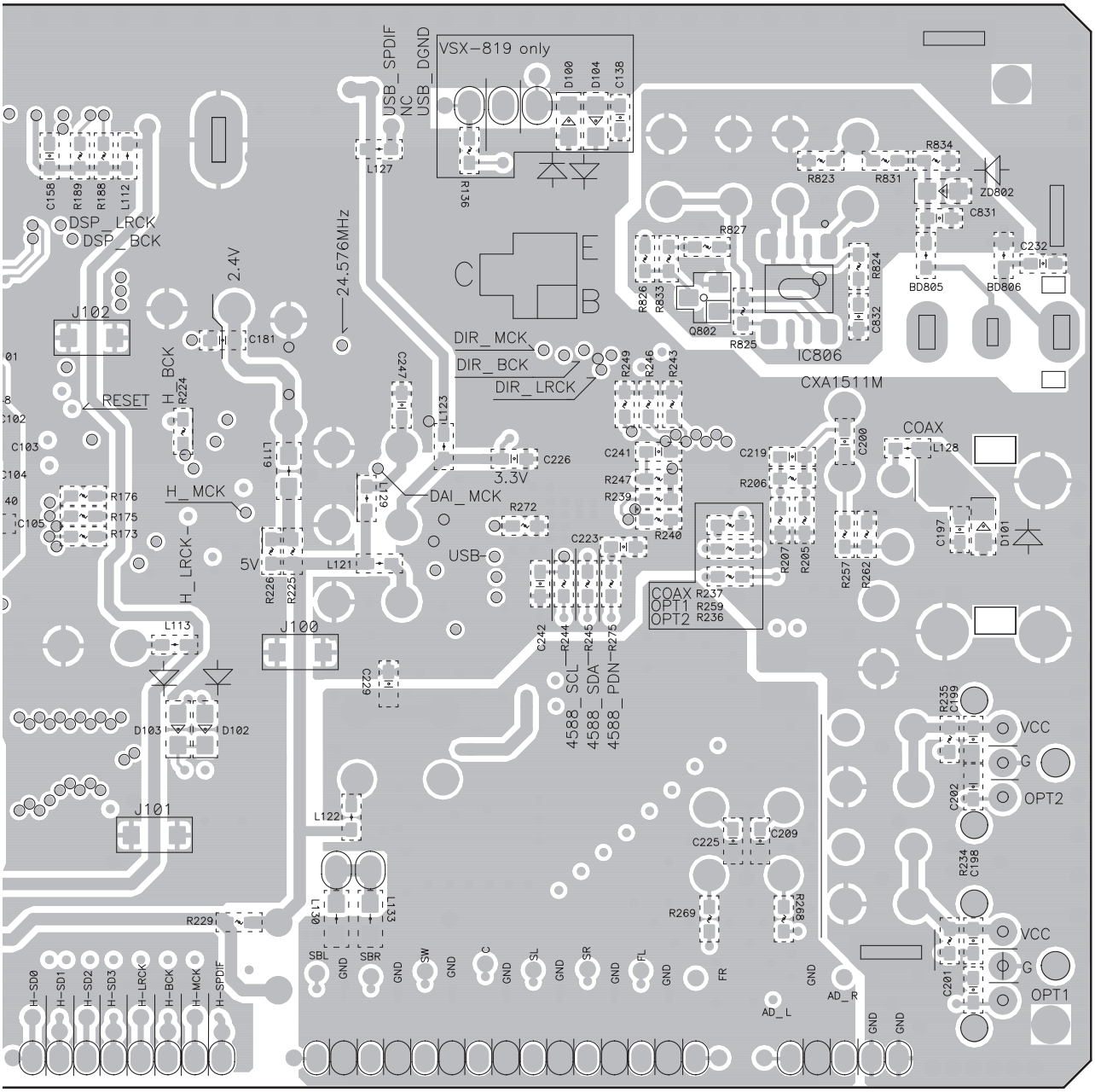
VSX-819 only
USB_SPDIF
NC
USB_DGND
D100
D104
C138
R136
L127
C158
R189
R188
L112
DSP_LRCK
DSP_BCK
J102
2.4V
24.576MHz
C181
RESET
H_BCK
R224
H_MCK
H_LRCK
R176
R175
R173
C105
C103
C104
L119
L129
C247
L123
DIR_MCK
DIR_BCK
DIR_LRCK
DAI_MCK
C226
3.3V
R272
USB
5V
L121
R226
R225
J100
L113
D103
D102
J101
C229
L122
L130
L133
R229
SBL
SBR
GND
SW
C
SL
SR
FL
FR
AD_L
AD_R
H-SD0
H-SD1
H-SD2
H-SD3
H-LRCK
H-BCK
H-MCK
H-SPDIF
4588_SCL
4588_SDA
4588_PDN
C242
R244
R245
R275
C223
R249
R246
R243
R241
R247
R239
R240
C241
R827
R826
R833
Q802
R825
R823
R831
R834
ZD802
C831
BD805
BD806
C232
R824
C832
IC806
CXA1511M
C219
R206
R207
R205
C200
COAX
L128
C197
D101
R257
R262
COAX R237
OPT1 R259
OPT2 R236
R235
C199
VCC
G
OPT2
C202
R234
C198
C225
C209
R269
R268
C201
OPT1

F

11.9 P.C.B SUB ASSY (HDMI-819)

SIDE A

SIDE A

Q P.C.B SUB ASSY (HDMI-819)

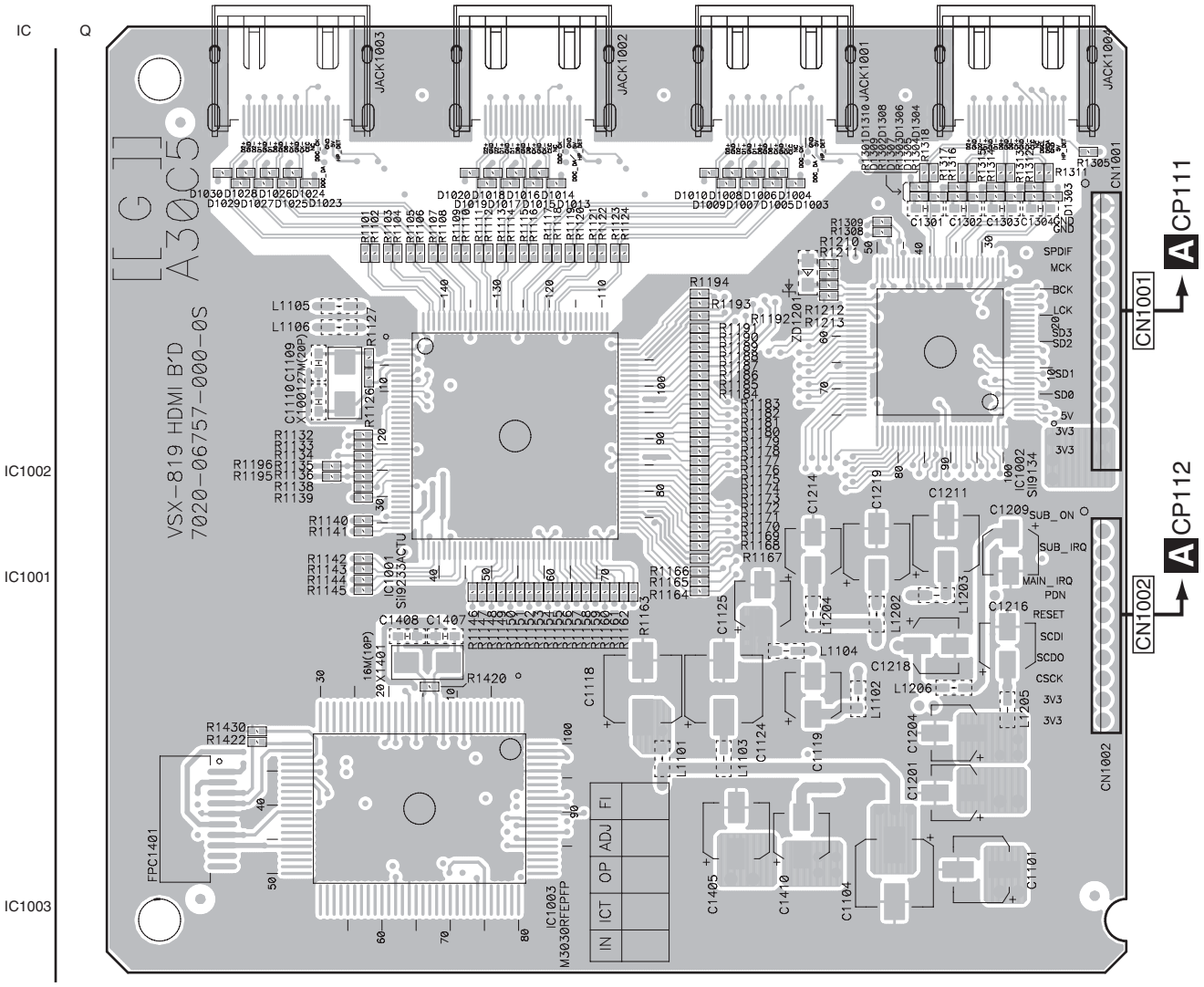

SIDE B

SIDE B

A

Q P.C.B SUB ASSY (HDMI-819)

B

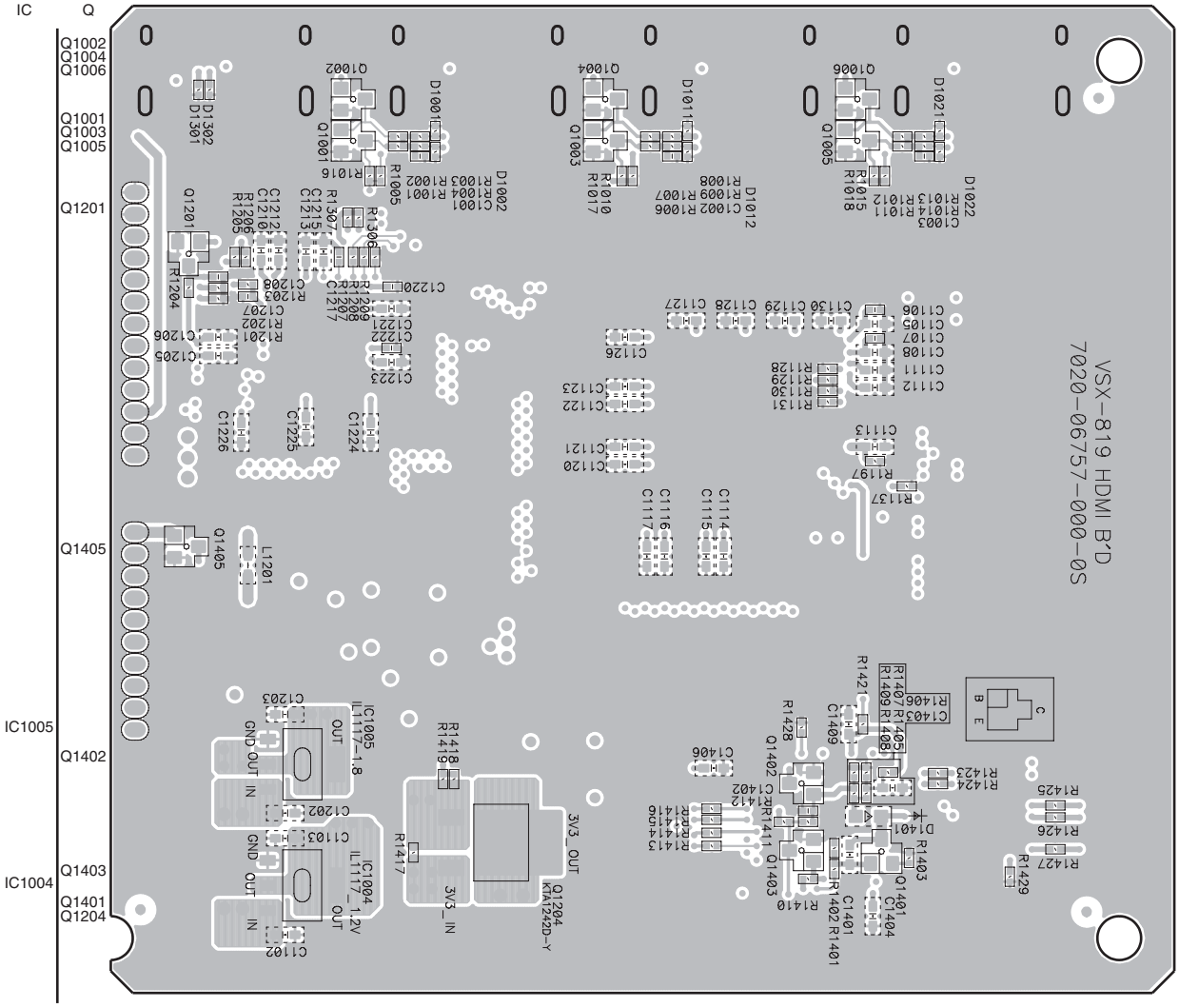

C

D

E

F

11.10 P.C.B SUB ASSY (USB)

SIDE A

SIDE A

R P.C.B SUB ASSY (USB)

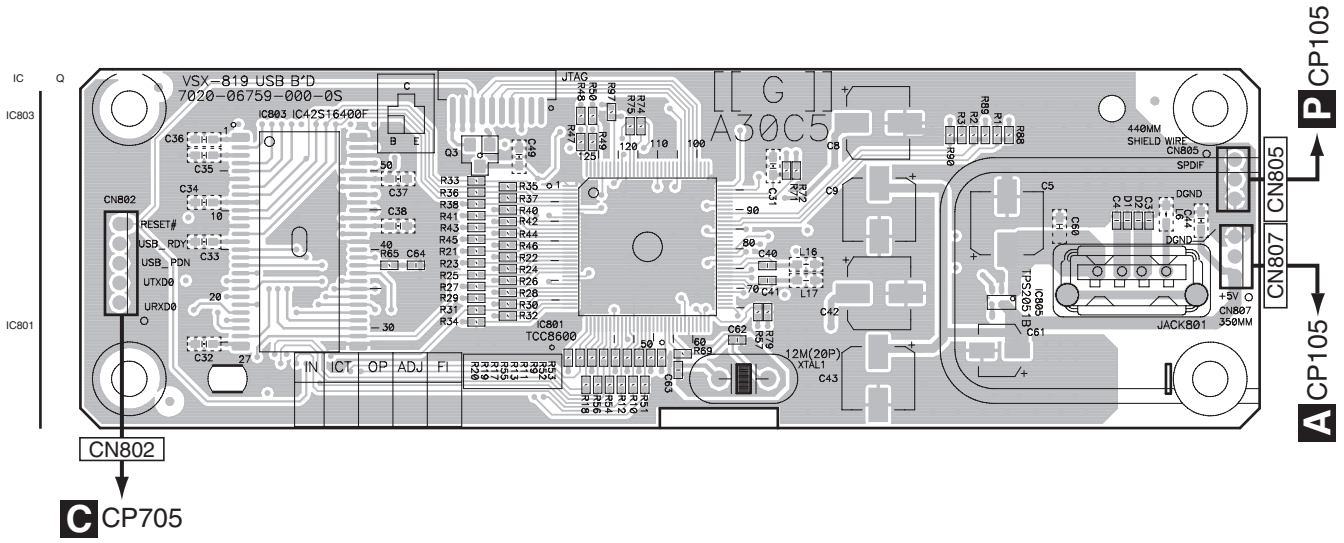

SIDE B

SIDE B

R P.C.B SUB ASSY (USB)

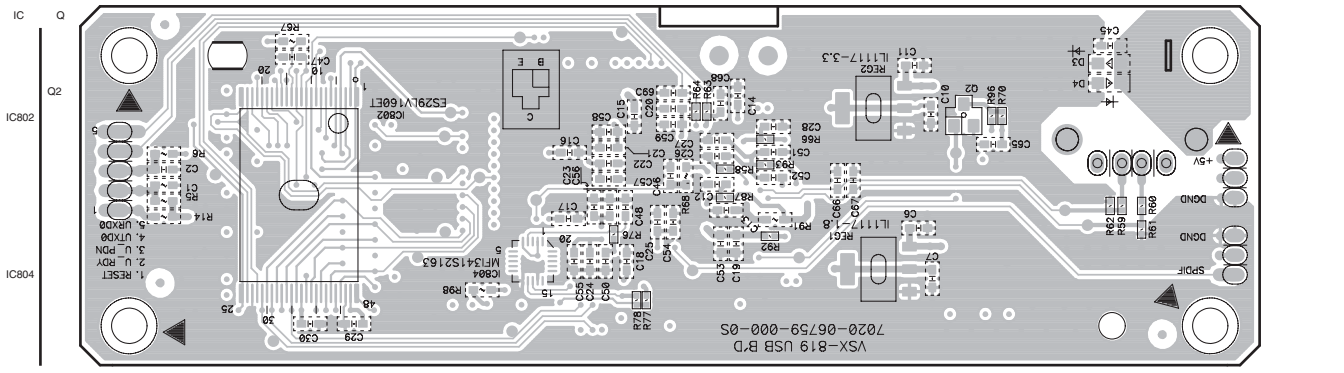

12. PCB PARTS LIST

NOTES:
- *Parts marked by "NSP" are generally unavailable because they are not in our Master Spare Parts List.*
- *The ⚠ mark found on some component parts indicates the importance of the safety factor of the part. Therefore, when replacing, be sure to use parts of identical designation.*
- *When ordering resistors, first convert resistance values into code form as shown in the following examples.*

  Ex.1 When there are 2 effective digits (any digit apart from 0), such as 560 ohm and 47 k ohm (tolerance is shown by J = 5%, and K = 10%).

560 Ω	→	56×10^1	→	561	RD1/4PU 5 6 1 J
47 kΩ	→	47×10^3	→	473	RD1/4PU 4 7 3 J
0.5 Ω	→	R50			RN2H R 5 0 K
1 Ω	→	1R0			RS1P 1 R 0 K

  Ex.2 When there are 3 effective digits (such as in high precision metal film resistors).

5.62 kΩ	→	562×10^1	→	5621	RN1/4PC 5 6 2 1 F

- *Meaning of the figures and others in the parentheses in the parts list.*

  Example) IC 301 is on the point (face A, 91 of x-axis, and 111 of y-axis) of the corresponding PC board.
  IC 301 (A, 91, 111) IC NJM2068V

● PCB PARTS LIST	● SCHEMATIC DIAGRAM and PCB CONNECTION DIAGRAM
JA***	JACK***, JK***
RY***	RLY***
T***	PT***
X***	XTAL***, RES*** (CERAMIC)
FU***	F***
V***	FLT***
S***	SW***, VEC*** (ENCODER)
Q***1 - Q***5	Q***FL, Q***FR, Q***C, Q***SL, Q***SR

LIST OF ASSEMBLIES

Mark	No.	Description	Part No.
NSP	1	P.C.B TOTAL ASSY (FRONT)	7025HK0811011-IL
	2	P.C.B SUB ASSY (FRONT)	7028067511010-IL
	2	P.C.B SUB ASSY (HEADPHONE)	7028067512010-IL
	2	P.C.B SUB ASSY (VOLUME)	7028067513010-IL
	2	P.C.B SUB ASSY (FUNCTION)	7028067514010-IL
	2	P.C.B SUB ASSY (F-VIDEO)	7028067515010-IL
	2	P.C.B SUB ASSY (MIC)	7028067516010-IL
NSP	1	P.C.B TOTAL ASSY (AMP)	7025HK0811012-IL
	2	P.C.B SUB ASSY (AMP)	7028067521010-IL
NSP	1	P.C.B TOTAL ASSY (DSP)	7025HK0811015-IL
	2	P.C.B SUB ASSY (DSP)	7028067561010-IL
NSP	1	P.C.B TOTAL ASSY (HDMI-819)	7025HK0811016-IL
	2	P.C.B SUB ASSY (HDMI-819)	7028067571010-IL
NSP	1	P.C.B TOTAL ASSY (USB)	7025HK0811017-IL
	2	P.C.B SUB ASSY (USB)	7028067591010-IL
NSP	1	P.C.B TOTAL ASSY (MAIN)	7025HK0811030-IL
	2	P.C.B SUB ASSY (MAIN)	7028067501030-IL
	2	P.C.B SUB ASSY (GUIDE PCB L)	7028067502010-IL
	2	P.C.B SUB ASSY (GUIDE PCB R)	7028067503010-IL
	2	P.C.B SUB ASSY (CNT)	7028067504010-IL
	2	P.C.B SUB ASSY (P/T)	7028067505010-IL
	2	P.C.B SUB ASSY (H/P GUIDE)	7028067506010-IL
NSP	1	P.C.B TOTAL ASSY (VIDEO-819)	7025HK0811031-IL
	2	P.C.B SUB ASSY (VIDEO-819)	7028067541020-IL
NSP	1	P.C.B TOTAL ASSY (INPUT-819)	7025HK0811032-IL
	2	P.C.B SUB ASSY (INPUT-819)	7028067531030-IL
NSP	1	P.C.B TOTAL ASSY (SPEAKER-819)	7025HK0811033-IL
	2	P.C.B SUB ASSY (SPEAKER-819)	7028067601020-IL

A P.C.B SUB ASSY (MAIN)

SEMICONDUCTORS

Mark	No.	Description	Part No.
	IC	101	J020303020030-IL
⚠	IC	103	J126781200040-IL
⚠	IC	104	J126791200060-IL
	IC	106	J000241600020-IL
	IC	109	J040740800230-IL
	IC	110	J040740800240-IL
⚠	IC	111,112	J126111733050-IL
⚠	IC	113-115	J126780500110-IL
⚠	IC	301	J126111700041-IL
⚠	IC	302	J126111750010-IL
	Q	101,102,138,300	J522038750210-IL
	Q	103,111	J522010500210-IL
⚠	Q	106,107	J501778000010-IL
⚠	Q	108	J5011049Y0010-IL
	Q	121,123,124	J5001268B0050-IL
	Q	122	J5023198Y0000-IL
⚠	Q	125	J5000916Y0050-IL
	Q	301	J522038750210-IL
	Q	302	J522107S00210-IL
	D	101-105,125,127	K005041480030-IL
	D	128,135,136	K005041480030-IL
⚠	D	301-304	K005041480030-IL
	D	1101-1103 (BD101-103)	K047604000020-IL

MISCELLANEOUS

Mark	No.	Description	Part No.
	L	101,102 (BEAD101, 102) BEAD,COIL	7610010030000-IL
	JA	101 TUNER	E903004100020-IL
	JA	102 TER,BOARD PUSH 2P	G592212A0300Y-IL
	JA	1011 JACK,DIN	G403515397000-IL
	RY	101 RELAY	G680120502050-IL
	RY	302 RELAY	G680060502010-IL
⚠	T	301 POWER TRANS	8200280150620-IL

Mark	No.	Description	Part No.
	X 101	RESONATOR,CERAMIC (16 MHz)	E830160000060-IL
	HS 101	HEAT SINK	2120210958010-IL
	HS 104,114	HEAT SINK	2120000818020-IL
⚠	FU 301	FUSE GLASS TUBE 20MM	N751226301110-IL

RESISTORS

	R 101-104,201,202		C060R22065050-IL
	R 105,106,203		C060033065050-IL
	R 159		C060015165050-IL
	R 174-176		C060022265050-IL
	R 178,179		C141R10069010-IL
	R 184		C0604R7065050-IL
⚠	R 186		C060022063050-IL
	R 304		C060010063050-IL

CAPACITORS

	C 179,180		D040682088010-IL
	C 182-186		D02010407H080-IL
	C 189		D040331088230-IL
	C 200		D040682083000-IL
	C 206		D040472084020-IL
	C 207		D040102084060-IL
	C 222,224		D040471081070-IL
	C 236		D040103083000-IL
	C 301		D040102083030-IL
	C 304		D00847208H010-IL
	C 1016,1017	(C101L, C101R)	D02010306C060-IL

B P.C.B SUB ASSY (P/T)

SEMICONDUCTORS

	Q 126,128,131,134		J5001268B0050-IL
	Q 127,129,130,132		J5023198Y0000-IL
	Q 133,135,136		J5023198Y0000-IL
	D 112,113		K005041480030-IL

RESISTORS

	R 189		C00004736P520-IL
	R 190		C060047363050-IL

C P.C.B SUB ASSY (FRONT)

SEMICONDUCTORS

	IC 701		J127163150010-IL
	IC 7011	(RMC701)	E940343800010-IL
	Q 701		J522010500210-IL
⚠	Q 702		J5000933S0050-IL
	Q 703		J522107S00210-IL
	D 701	(LED701)	K500052009011-IL

MISCELLANEOUS

	L 701	COIL	D330101001020-IL
	L 702	COIL,FILTER-INDUCTOR	D330100700520-IL
	V 701	DISPLAY,FLT	K530126300010-IL
	S 701-714	SWITCH	G180040500010-IL
	0000	HOLDER	432004078301A-IL

RESISTORS

	R 779,780		C0602R2063050-IL

CAPACITORS

	C 718,719		D02047306C060-IL

D P.C.B SUB ASSY (VOLUME)

SEMICONDUCTORS

	D 707,709		K005041480030-IL

MISCELLANEOUS

	S 702	SW,ENCODER	G121123040010-IL

E P.C.B SUB ASSY (FUNCTION)

SEMICONDUCTORS

	D 711,712		K005041480030-IL

MISCELLANEOUS

	S 701	SW,ENCODER	G121123050020-IL
	S 715	SWITCH	G180040500010-IL

F P.C.B SUB ASSY (HEADPHONE)

SEMICONDUCTORS

	D 705,706		K005041480030-IL

MISCELLANEOUS

	JA 701	JACK,D6.5	G402PJ619AG0Y-IL

G P.C.B SUB ASSY (F-VIDEO)

SEMICONDUCTORS

	D 701-704		K005041480030-IL

MISCELLANEOUS

	JA 704	TER,RCA 3PIN	G60603W0192GD-IL

H P.C.B SUB ASSY (MIC)

SEMICONDUCTORS

	IC 702		J121458000020-IL
	D 708,710		K005041480030-IL

MISCELLANEOUS

	JA 702	JACK,D3.5	G401PJ354H40Y-IL

J P.C.B SUB ASSY (AMP)

SEMICONDUCTORS

	Q 2021-2025,2061-2065		J5023200B0050-IL
	Q 2031-2035,2041-2045		J5000992F0050-IL

MISCELLANEOUS

	L 2011-2015	COIL,FILTER-INDUCTOR	D330900001330-IL
	VR 2011-2015	VR,SEMI CARBON MOLD	C541102315000-IL

RESISTORS

	R 227,229		C060010065050-IL
	R 2011-2015		C00007526P520-IL
	R 2021-2025,2071-2075		C060056265050-IL
	R 2031-2035		C00002226P520-IL
	R 2041-2045		C00004746P520-IL
	R 2051-2055,2231-2235		C0604R7063050-IL
	R 2061-2065		C00001036P520-IL
	R 2081-2085		C00005626P520-IL
⚠	R 2091-2095,2101-2105		N113136647820-IL
	R 2111-2115		C00002216P520-IL

Mark	No.	Description	Part No.
	R 2121-2125,2181-2185		C00003336P520-IL
	R 2131-2135		C00003026P520-IL
	R 2141-2145		C060010065520-IL
⚠	R 2151-2155,2161-2165		N113136647820-IL
	R 2191-2195		C00003346P520-IL
	R 2201-2205		C00005616P520-IL
	R 2211-2215,2251-2255		C00001226P520-IL
	R 2221-2225		C00004736P520-IL
	R 2241-2245		C060047063050-IL
	R 2261-2265		C00004716P520-IL
	R 2281-2285		N113135610020-IL
	CAPACITORS		
	C 2011-2015,2111-2115		D00410106D050-IL
	C 2031-2035		D00422106D05C-IL
	C 2041-2045		D00033006D050-IL
	C 2091-2095		D004471277050-IL
	C 2101-2105		D004102277050-IL
	C 2131-2135,2141-2145		D020104167050-IL

K P.C.B SUB ASSY (INPUT-819)

Mark	No.	Description	Part No.
	SEMICONDUCTORS		
	IC 801		J084152180010-IL
	IC 802		J121458000020-IL
	Q 801,803,805,806		J5222875B0010-IL
	Q 802,804,807,809		J520010200210-IL
	Q 808,812,814		J5222875B0010-IL
	Q 813		J520010200210-IL
	D 801-810		K005041480030-IL
	MISCELLANEOUS		
	JA 801	RCA JACK	G601207AE020Y-IL
	JA 802-804	TER,RCA 6PIN	G603060056000-IL
	RESISTORS		
⚠	R 874,875		C060010165060-IL
	CAPACITORS		
	C 803,830		D02022306C060-IL
	C 804,829		D02047306C060-IL
	C 805,828		D020154068050-IL

L P.C.B SUB ASSY (VIDEO-819)

Mark	No.	Description	Part No.
	SEMICONDUCTORS		
	IC 1001,1002		J040405100050-IL
	IC 1003		J170747810010-IL
	IC 1004		J171258600010-IL
⚠	IC 1005		J126790500070-IL
	IC 1007		J121458000020-IL
	IC 1008		J127154200020-IL
	Q 1002-1005,1007-1012		J5222875B0010-IL
	Q 1006		J5000933S0050-IL
	Q 1013,1014		J520010200210-IL
	MISCELLANEOUS		
	L 1001	COIL,FILTER-INDUCTOR	D330330700520-IL
	JA 1001	TER,RCA	G608610D0210Y-IL
	JA 1002	TER,RCA	G608610D0209Y-IL
	JA 1003	TER,RCA 9PIN	G607902AD016Y-IL
	X 1001	CRYSTAL	E80014R318080-IL

M P.C.B SUB ASSY (SPEAKER-819)

Mark	No.	Description	Part No.
	SEMICONDUCTORS		
	Q 401-404		J522010500210-IL
	D 401-408		K005041480030-IL
	MISCELLANEOUS		
	JA 401	TER,BOARD SCREW 8P	G614108V1010M-IL
	JA 402	TER,BOARD SCREW 2P	G611201A0200Y-IL
	RY 401-403	RELAY	G680120502050-IL
	RY 404	RELAY	G680240202030-IL
	RESISTORS		
	R 4016,4017 (R401L, R401R)		C060033166520-IL

N P.C.B SUB ASSY (CNT)

P.C.B SUB ASSY (CNT) has no service part.

P P.C.B SUB ASSY (DSP)

Mark	No.	Description	Part No.
	SEMICONDUCTORS		
	IC 100		J001421640040-IL
	IC 101		J005291600040-IL
	IC 102		J080320788010-IL
⚠	IC 103	(REG103)	J126111700041-IL
	IC 106		J040742570030-IL
	IC 109		J080458800010-IL
	IC 110		J040740400290-IL
	IC 806		J030151100010-IL
⚠	IC 1011,1021	(REG101, REG102)	J126111712040-IL
	Q 802		J522010500210-IL
	D 100-104		K005041480030-IL
	MISCELLANEOUS		
	L 115,116	COIL	D3304R7000150-IL
	L 117	COIL	D3302R2000150-IL
	L 120	BEAD,COIL	7610035500030-IL
	JA 102	TER,RCA 1PIN	G600107A0000Y-IL
	JA 105,106	OPTICAL RECEIVER	E100116500040-IL
	JA 804	JACK,D3.5	G40130802000Y-IL
	X 101	CRYSTAL CHIP (24.576 MHz)	E80524R576020-IL
	CAPACITORS		
	C 823,825		D02012306C060-IL

Q P.C.B SUB ASSY (HDMI-819)

Mark	No.	Description	Part No.
	SEMICONDUCTORS		
	IC 1001		J040923300030-IL
	IC 1002		J040913400010-IL
	IC 1003		J020303020030-IL
⚠	IC 1004		J126111712040-IL
⚠	IC 1005		J126111710011-IL
	Q 1001-1006		J522390400010-IL
	Q 1201		J522104S00210-IL
⚠	Q 1204		J500124200010-IL
	Q 1401		J5232114K0010-IL
	Q 1402,1403		J522038750210-IL
	Q 1405		J522010200210-IL

Mark	No.	Description	Part No.
	D 1401		K005041480030-IL

MISCELLANEOUS

	JA 1001-1004	CN.WAFER	L109100190050-IL
	X 1001	CRYSTAL CHIP (27.000 MHz)	E80527R000010-IL
	X 1401	CRYSTAL CHIP (16.000 MHz)	E80516R000010-IL

R P.C.B SUB ASSY (USB)

SEMICONDUCTORS

⚠	IC 1	(REG1)	J126111710011-IL
⚠	IC 2	(REG2)	J126111700041-IL
	IC 801		J085860000010-IL
	IC 802		J005291600040-IL
	IC 803		J001421640040-IL
	IC 804		341S2164
⚠	IC 805		J046205100010-IL
	Q 2		J522010200210-IL
	Q 3		J520103S00210-IL
	D 3,4		K005041480030-IL

MISCELLANEOUS

	JA 801	CN,PLUG CONTACT	G480040400020-IL
	X 1	CRYSTAL	E80012R000010-IL

P.C.B SUB ASSY (GUIDE-L)

MISCELLANEOUS

	801	JHMX9800(ON)HAITI)	4330000120000-IL

P.C.B SUB ASSY (GUIDE-R)

MISCELLANEOUS

	901	JHMX9800(ON)HAITI)	4330000120000-IL

P.C.B SUB ASSY (H/P GUIDE)

MISCELLANEOUS

	201	BRACKET	4010210196000-IL