FT-897 mods

View PDF mods file

1 Remove the 8 screws affixing the top panel of the transceiver and gently lift it off.

2 Carefully remove the small 2-pin speaker plug from the left rear corner of the transceiver interior, then remove the heavier 6-pin plug from the connector inside the right side of the transceiver.
This can be removed by pushing on the tab to release the connector.

3 Locate the nine jumpers. These are located about 2" from the front edge of the main unit and about 3/4" from the left edge. You now have a choice of 2 different mods:

For 144/430MHZ TX expansion only, remove the jumper at JP1002, leaving the other jumpers alone. For the complete expansion per the above listing, place jumpers at JP1007/1008/1009, and remove the jumpers at JP1001/1002/1003/1004/1005(leave the jumper at JP1006 in place). Note the unusual sequence for the numbering. With the front of the rig facing forward, from the front of the rig to the back, the numbers of the jumpers are as follows: 1003,1002,1001,1006,1005,1004,1009,1008, 1007.

Result of radio should look like below after FULL mod was done:

----BACK OF RADIO------
1007 - Jumper
1008 - Jumper
1009 - Jumper
1004 - Blank
1005 - Blank
1006 - Jumper
1001 - Blank
1002 - Blank
1003 - Blank
----FRONT OF RADIO-----

4 Replace the top panel

5 With the transceiver off, press and hold the [F] and [V/M] keys; while holding them in, turn the radio on. Modification is now complete.

6 The radio is now complely reset to all the original factory settings except that it now is able to transmit 1.8-56 MHz, 137-164
MHz, and 420-470 MHz. You will need to reprogram all the menu operations and memory channels

YAESU FT-897 / FC-30 Fan modification

I use the FT-897 with the optional Antenna-Tuner FC-30.
It always makes me nervous if a fan is running, but in modern rigs it seems to be a normal (annoying) thing. Nevertheless this waste valuable energie when you use the FT-897 as a portable with its internal NiMh-Accus.
If the FC-30 is connected its fan runs all the time - thats needlessly ! So I decided to integrate a temperature-switch ...

I found a small circuit at www.conrad.de with the order no. 114421, sized like a stamp. You only have to

cut the fan wireing and integrate this circuit - very easy.

Adjust the circuit that it switched off the fan at a normal (room-)temperature. A LED is on the module ... its very helpful and there is no need to connect the fan for adjustment.

Then place the temperature-sensor near the coil in the FC-30; - I fixed the circuit with double-side tape.

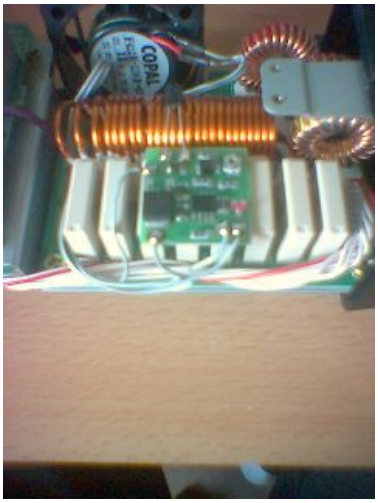

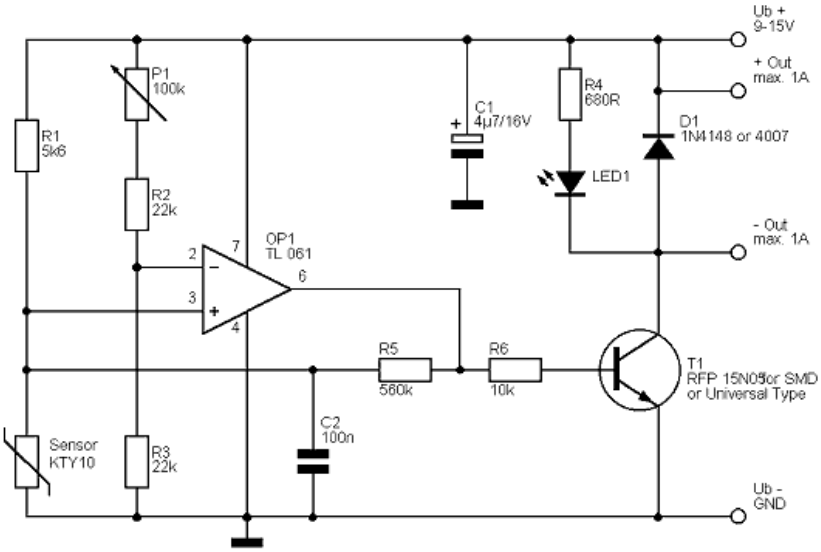

Thats all !

Mars/Cap mod for Yaesu FT-897

1- Remove top cover of radio being careful to remove speaker and battery switch connectors.

2- Locate Q1049 number on chip is HD64F2134FA20.. There are 9 solder pads connected to this chip through D1044, D1047, and D1048. On my radio pads 6, 7, and 8 are populated. Number 1 pad would be closer to the rear of the radio.

3- Populate pads 1, 2, and 3 with a piece of fine wire or just bridge the gap with solder.

4- Reset the radio by pressing and holding "V/M" and "F" buttons while turning on the radio. You will hear a series of beeps.

After mod radio will transceive 1.8-56 MHz, 137

DRM modification for Yaesu FT-897

For recieving DRM we had the following equipment:

Yaesu FT-897
DRM Mixer Modul – 455 kHz Quarz Version by Sat-Service Schneider http://home.t-online.de/home/sat-service/sat/DRM/DRM.htm
Dream - GPL DRM decoder http://drm.sourceforge.net

Remove the upper cover from the transceiver.

Look for the slots for optional CW or SSB filter (backside, left)

It's labelled: J24 and J23 Bridge the left two pins of J24 – so the software will use this slot as if the SSB filter is installed.

Put a 120 pF capacitor between the right pin of J24 and the right pin of J23. The third pin of J23 is connected to ground.

Connect the DRM mixer module to the two right pins of J23 (ground and 455 kHz IF in) – see page 3 **(1)** and **(2)**.

You can get the voltage for the mixer from the right backside of the transceiver (only + needed).

For using the DRM receiver you have to use the 2.3 kHz optional Filter setting in Menue N (that's the reason for the J24 jumper).

Opened transceiver:

Filter slots:

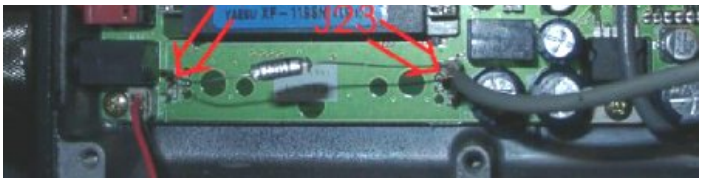

FIL-1 schematic:

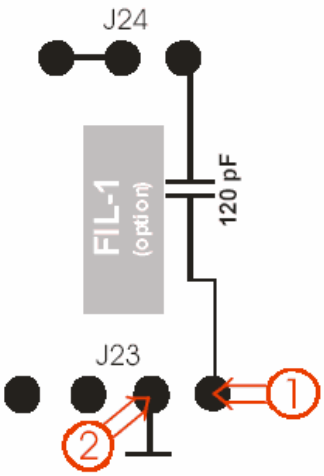

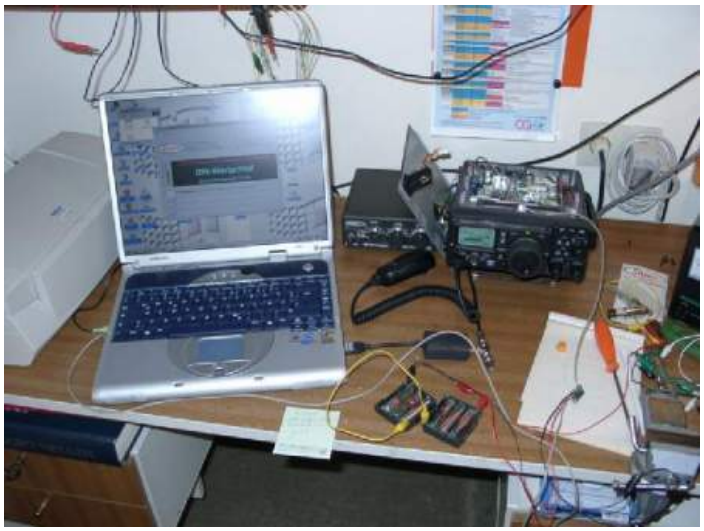

FT-897 mod for SGC-230 DC power

the FT-897 a lot with the SGC-230 smartuner, a fine combination. Because I installed the optional power supply and also when operationg on a DC battery, I wanted a easy solution to power my SGC-230.

Remove bottom cover or optional power supply FP-30

Locate the red and black wire for main power supply to board

Insert two short wires through the smal hole next to the power socket

Solder those two wires (red & black) onto the board, there are two free solderpoints below the power cords

Secure the soldered wires against pulling with small straps (also just behind the chassis)

Replace the bottom cover or power supply.

You can additionally use smal straps to align the two female DC connectors.

I used 0.75mm² wire so I have more than enough current without risk. You could insert an extra fuse for further protection.

The SGC-230 takes up 0.9 Amps while operation. Other models even use less current.

The mods is very easy to carry out and doesn't require high skills, but I recommend using a decent soldering iron.
This mod is great, now I can hook up my SGC-230 (or even another low current device) in a very compact and decent way.
The mod can be easely reversed if needed.

© 2003 by ON4VP

OUTPUT
DC 13.8V
11.5A
22A(MAX)
© 2003 by ON4VP

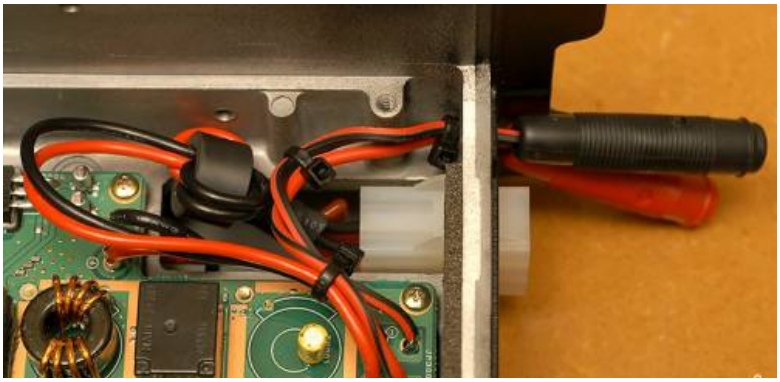

FT897/857/817 Jumpers by Software

The small program is to update the Jumper settings for the Yaesu FT897, FT817 and FT857 via the CAT interface.

It is available in the FT897 group on yahoo: http://groups.yahoo.com/group/FT897/files/softjump.zip

This program allows you to perform the jumper modification without modifying the hardware on your radio.

Installing The FT-897 Options

Here are a few photos showing the procedure to install the optional filters, TXCO-9 and internal batteries to the Yaesu FT-897 rig. There's nothing hard about installing any of these modifications. The instructions in the Yaesu manual are fairly comprehensive and the menu options to select them are easy to get right.

Make sure to get the filters and TXCO-9 round the right way. It's worth noting that the actual filters are labeled with different part numbers than on the boxes! The YF-122S is marked XF-119SN and the YF-122C is marked XF-119C. Please email me if you have any questions or comments. Click on any of the pictures to see it in full detail. Hover your mouse over the pictures to see my comments on it.

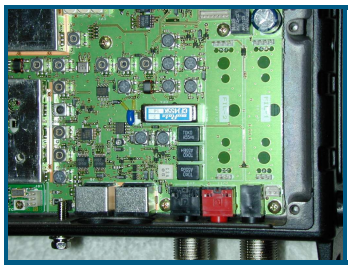

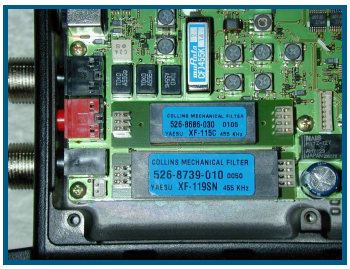

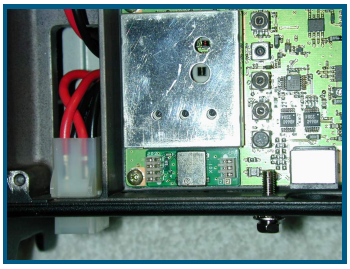
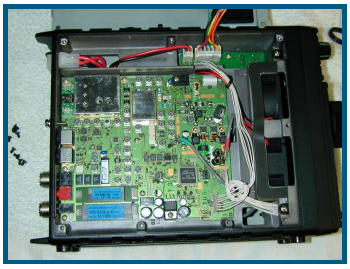
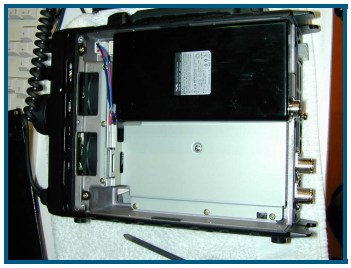
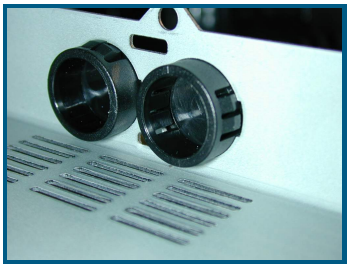

Legal notice - All the material on this website is Copyright 2003 Dave Fifield, AD6A, all rights reserved - please ask for permission if you would like to utilize any or all of it in any form other than for your own immediate personal use.

FT-897 Second Menu (Adjustmenu) fuctions

Their is a second set of menu functions F01 to F74.

WARNING: changing these will reset all the memories.

I want to warn you do not change these values unless you are sure of what you are doing. To get them turn transceiver off. Press and hold the A,B,C keys; while holding them in, press and hold in the [PWR] switch for 1/2 second to turn the tranceiver On. Now let go of all keys. Then press and hold func key for 1/2

second to get to the menu and then rotate the select knob to get to a second menu (F01 to F74). When you turn the rig off and back on it returns to normal menu. Here is a list of the 74 second menu functions.

Function Setting in my radio

Adjust-No	Function	Setting	Mode	Frequency
NO-001	HF1-RXG	118	CW	1.800.00
NO-002	HF2-RXG	91	CW	7.068.19
NO-003	HF3-RXG	133	CW	21.225.13
NO-004	50M-RXG	106	CW	50.000.00
NO-005	VHF-RXG	77	CW	145.437.50
NO-006	UHF-RXG	103	CW	438.900.00
NO-007	SSB-S9	61	CW	21.225.13
NO-008	SSB-FS	54	CW	21.225.13
NO-009	FM-S1	68	FM	145.437.50
NO-010	FM-FS	99	FM	145.437.50
NO-011	DISC-L	50	FM	145.437.50
NO-012	DISC-H	79	FM	145.437.50
NO-013	FM-TH1	100	FM	145.437.50
NO-014	FM-TH2	100	FM	145.437.50
NO-015	FM-TI1	10	FM	145.437.50
NO-016	FM-TI2	10	FM	145.437.50
NO-017	VCC	138	FM	145.437.50
NO-018	HF1-IC	83	CW	1.800.00
NO-019	HF2-IC	80	CW	7.068.19
NO-020	HF3-IC	87	CW	21.225.13
NO-021	50M-IC	84	CW	50.000.00
NO-022	VHF-IC	72	CW	145.437.50
NO-023	UHF-IC	74	CW	438.900.00
NO-024	HF1-PO-MAX	165	CW	1.800.00
NO-025	HF1-PO-MID2	105	CW	1.800.00
NO-026	HF1-PO-MID1	31	CW	1.800.00
NO-027	HF1-PO-MIN	13	CW	1.800.00
NO-028	HF2-PO-MAX	159	CW	7.068.19
NO-029	HF2-PO-MID2	102	CW	7.068.19
NO-030	HF2-PO-MID1	29	CW	7.068.19
NO-031	HF2-PO-MIN	11	CW	7.068.19
NO-032	HF3-PO-MAX	158	CW	21.225.13
NO-033	HF3-PO-MID2	101	CW	21.225.13
NO-034	HF3-PO-MID1	29	CW	21.225.13
NO-035	HF3-PO-MIN	11	CW	21.225.13
NO-036	50M-PO-MAX	145	CW	50.000.00
NO-037	50M-PO-MID2	92	CW	50.000.00
NO-038	50M-PO-MID1	47	CW	50.000.00
NO-039	50M-PO-MIN	8	CW	50.000.00
NO-040	VHF-PO-MAX	87	CW	145.437.50
NO-041	VHF-PO-MID	43	CW	145.437.50
NO-042	VHF-PO-MIN	7	CW	145.437.50

NO-043	UHF-PO-MAX	112	CW	438.900.00
NO-044	UHF-PO-MIN	16	CW	438.900.00
NO-045	HF1-TXG	48	USB	1.800.00
NO-046	HF2-TXG	38	USB	7.068.19
NO-047	HF3-TXG	43	USB	21.225.13
NO-048	50M-TXG	40	USB	50.000.00
NO-049	VHF-TXG	47	USB	145.437.50
NO-050	UHF-TXG	49	USB	438.900.00
NO-051	ALC1-M	203	USB	21.225.13
NO-052	ALC-M	85	USB	21.225.13
NO-053	HF1-REV-ALC	61	CW	1.800.00
NO-054	HF2-REV-ALC	56	CW	7.068.19
NO-055	HF3-REV-ALC	50	CW	21.225.13
NO-056	50M-REV-ALC	47	CW	50.000.00
NO-057	VHF-REV-ALC	62	CW	145.437.50
NO-058	UHF-REV-ALC	57	CW	438.900.00
NO-059	CW-CAR-LEVEL	144	CW	21.225.13
NO-060	AM-CAR-LEVEL	125	AM	21.225.13
NO-061	DEV-W	216	FM	145.437.50
NO-062	DEV-N	110	FM	145.437.50
NO-063	MOD-MTR	200	FM	145.437.50
NO-064	DTMF-DEV	10	FM	145.437.50
NO-065	CTCSS-DEV	233	FM	145.437.50
NO-066	DCS-DEV	168	FM	145.437.50
NO-067	LSB-CAR-POINT	-7	LSB	21.225.13
NO-068	USB-CAR-POINT	+5	USB	21.225.13
NO-069	VSWR2 at 10W	17	CW	14.257.90
NO-070	VSWR3 at 10W	42	CW	14.257.90
NO-071	ATAS-TEST		LSB	14.257.90
NO-072	AMTR-TEST		LSB	14.257.90
NO-073	HTEMP-THRESHOLD	38	LSB	14.257.90
NO-074	FTEMP-THRESHOLD	102	LSB	14.257.90

FT-897 jumper sheet

Click on image to enlarge

TECHNICAL LIBRARY

Model: FT-897

File Nr.:	FT897.doc	**Serial Number Range:**	All
Date of issue:	August 30, 2002	**Page:**	1

(X=Jumper)

Type	TX Frequency Range			RX Frequency Range			JUMPER (J10**)						Remarks	
	HF	VHF	UHF	HF	VHF	UHF	O1	O2	O3	O7	O8	O9	FM CH step	RPT Shift
B1	BAND 1	144-146	430-440	0.1-30/50-54/87.5-108	144-146	430-440	X	X	X	X	X		12.5/25 kHz	0.1/0/0.6/7.6 MHz
B2	BAND 1	144-146	430-440	0.1-33/33-56/76-108	118-164	420-470	X	X			X		12.5/25 kHz	0.1/0/0.6/7.6 MHz
B3	BAND 2	137-164	420-470	0.1-33/33-65/76-108	118-164	420-470	X	—			X		12.5/25 kHz	0.1/0/0.6/7.6 MHz
C1	BAND 3	144-146	430-440	0.1-30/50-54/87.5-108	144-146	430-440	X	X	X		X		12.5/25 kHz	0.1/0.5/0.6/1.6 MHz
C2	BAND 3	144-146	430-440	0.1-33/33-56/76-108	118-164	420-470	X	X			X		12.5/25 kHz	0.1/0.5/0.6/1.6 MHz
C3	BAND 2	137-164	420-470	0.1-33/33-56/76-108	118-164	420-470	X				X		12.5/25 kHz	0.1/0.5/0.6/1.6 MHz
D1	BAND 4	144-146	432-438	0.1-30/50-54/87.5-108	144-146	432-438	X	X	X	X	X		12.5/25 kHz	0.1/0/0.6/1.6 MHz
D2	BAND 4	144-146	432-438	0.1-33/33-56/76-108	118-164	420-470	X	X		X	X		12.5/25 kHz	0.1/0/0.6/1.6 MHz
E1	BAND 5	144-146	430-440	0.1-30/50-54/87.5-108	144-146	430-440	X	X	X			X	12.5/25 kHz	0.1/0/0.6/1.6 MHz
E2	BAND 5	144-146	430-440	0.1-33/33-56/76.0-108	118-164	420-470	X	X				X	12.5/25 kHz	0.1/0/0.6/1.6 MHz
E3	BAND 2	137-164	420-470	0.1-33/33-56/76.0-108	118-164	420-470	X					X	12.5/25 kHz	0.1/0/0.6/1.6 MHz

BAND	160 m	80 m	40 m	30 m	20 m	17 m	15 m	12 m	10 m	6 m
1	1.815 - 1.890	3.500 - 3.800	7.000 - 7.100	10.100 - 10.150	14.000 - 14.350	18.068 - 18.168	21.000 - 21.450	24.890 - 24.990	28.000 - 29.700	50.000 - 52.000
2	1.800 - 2.000	3.500 - 4.000	7.000 - 7.500	10.000 - 10.500	14.000 - 14.500	18.000 - 18.500	21.000 - 21.500	24.500 - 25.000	28.000 - 30.000	50.000 - 54.000
3	1.800 - 2.000	3.500 - 3.800	7.000 - 7.100	10.000 - 10.150	14.000 - 14.350	18.068 - 18.168	21.000 - 210450	24.890 - 24.990	28.000 - 29.700	50.000 - 52.000
4	1.820 - 1.850	3.500 - 3.800	7.000 - 7.100	10.100 - 10.150	14.000 - 14.350	18.068 - 18.168	21.000 - 21.450	24.890 - 24.990	28.000 - 29.700	50.200 - 52.000
5	1.810 - 1.850	3.500 - 3.801	7.000 - 7.100	10.100 - 10.150	14.000 - 14.350	18.068 - 18.168	21.000 - 21.450	24.890 - 24.990	28.000 - 29.700	50.200 - 51.200

Reset:
Press and hold [F] and [V/M] keys at the same time then turn power on.

Press and hold [F] and [VFM] keys at the same time then turn power on.

Strictly confidential information, not for distribution.

FT-897 mike-fix for better audio

The MH-31 delivered with some Yaesu-radio's, e.g. the FT-897, is an acoustic disaster - too bassy for "westerners"; -a very simple modification makes the mike OK.

Take off the back-cover of the mike (3 screws).

Loosen the three black screws and loosen the printed circuit.

Carefully take out the mike- cartridge.

With a VERY small soldering-iron-tip, burn a little hole in the middle of the membrane, max 1 - 2 mm wide; start with the smallest! Reassemble the mike! - and test it on the air.

This little mod. takes away the worst bass - on-the-air-reports indicate a dramatic improvement!

Don't blame me, if u spoil the mike - by a new cartridge!!