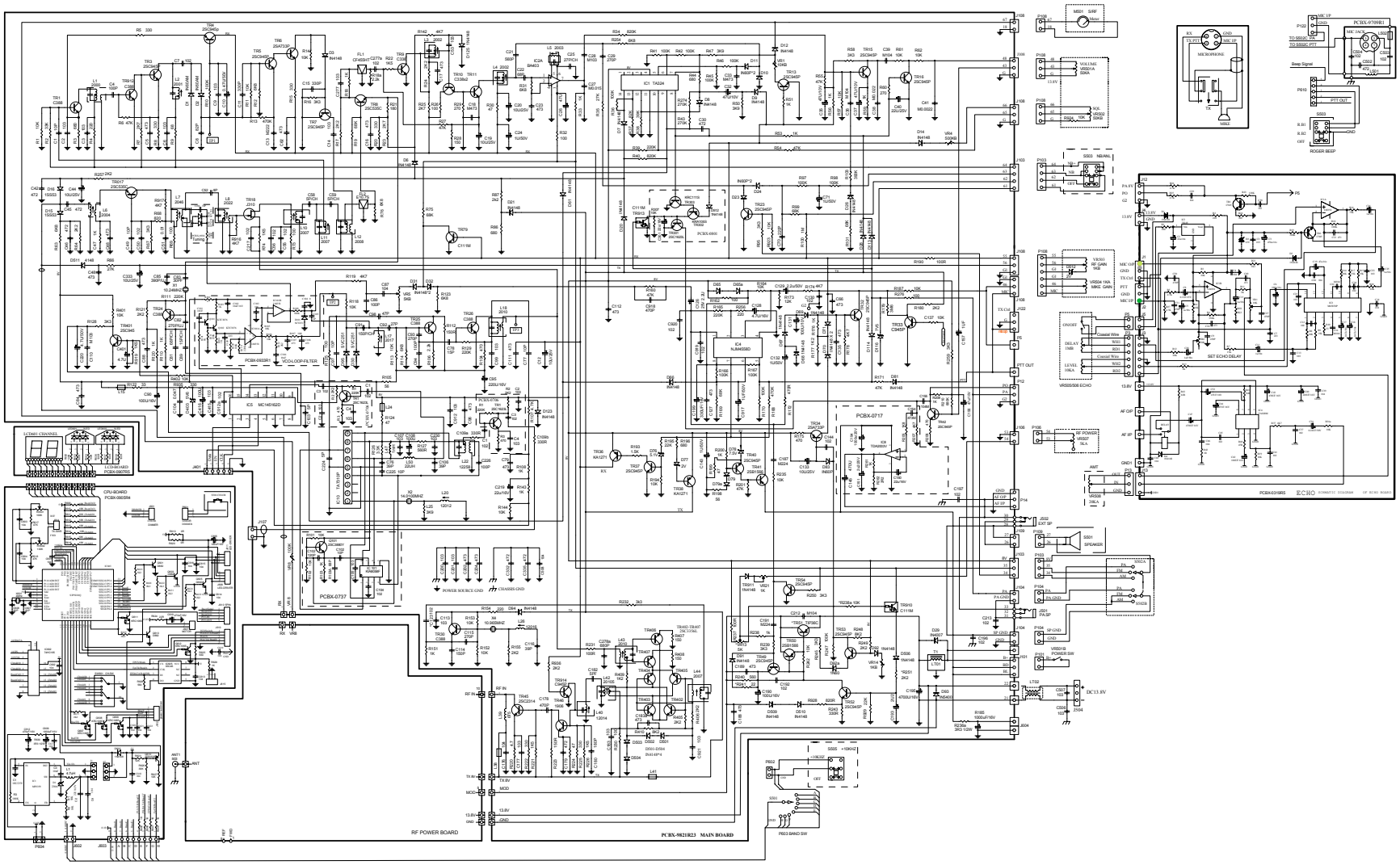
PCBX-0737
RF POWER BOARD
PCBX-9821R23 MAIN BOARD
PCBX-0717
PCBX-0663R2
VCO/LOOP/FILTER
PCBX-0663R4
CPU-BOARD
PCBX-0665R4
LCD/BOARD
PCBX-0667R5
LCD/BOARD
PCBX-0663R5
ECHO
SET ECHO DELAY
VR5S/S5/E ECHO
MICROPHONE
PCBX-9769R1
ROGER BEEP
PB23 BAND SW
POWER SOURCE GND
CHASSIS GND
DC13.6V