Galaxy DX Radios DX94HP

Documentation Project

CBTricks.com

Alignment Locations
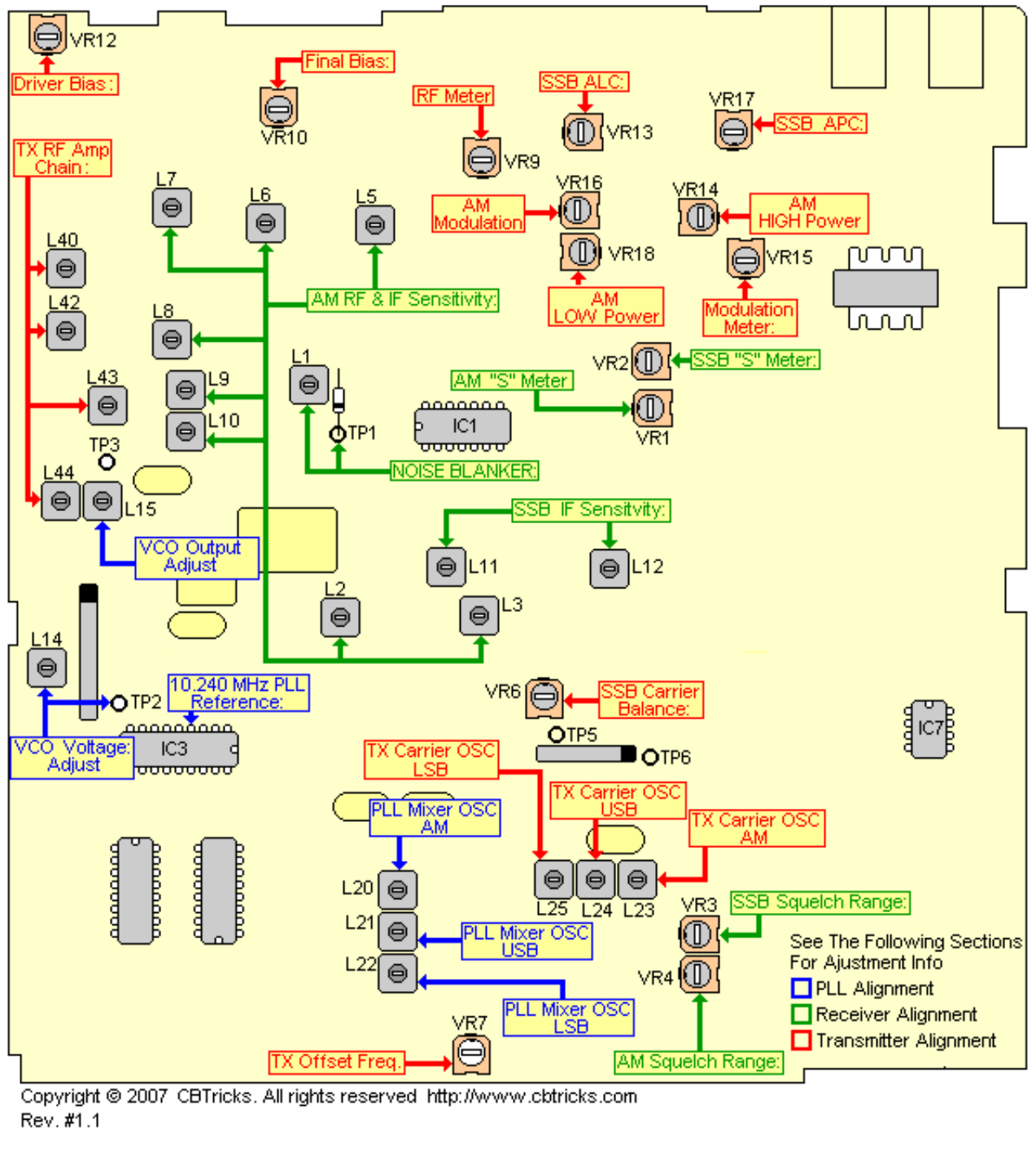
PLL Alignment
Transmitter Alignment
Receiver Alignment